POOL COVER

SPECIALISTS®

AUTO COVERS MADE SIMPLE

2019 Parts Catalog

LATHAM behind every pool

SP-PCS-0005 bm 5.30.19

Table of Contents

Infinity 4000™ Systems	3
Infinity 4000™ Mechanism Assembly 2017	4
Infinity 4000™ Mechanism Assembly 2014	5
3 Wire Bison Motor	6
End Casting Assembly	7
Universal Double Dog Assembly	8
Top Track Slider Assembly	9
Top Track Molded Wheel Assembly	10
Top Track Wheel Assembly	11
Under Track Outside Slider Assembly	12
Slider Assembly 3” Extended	13
Standard Under Track Slider Assembly	14
Slider Assembly UT for 4” LE	15
Slider Assembly UT for 2-1/2 x 4-1/2” LE	16
Vanishing Edge Slider Assembly	17
IDEC Key Switch Assembly	18
Polymer Housing	19
Aluminum Bench	20
Deck Mount Plastic Housing	21
Slider Assemblies	22
Slider Comparison Chart	23-25
Trak & Hardware for TT Systems	26
Trak & Hardware for UT Systems	27
Replacement Parts UT Systems Pre 2018	28
Competitors Hardware	29
Motors & Motor Controllers	30
System Controllers	31
Lid and Bench Brackets	32
Aluminum Lid for TT and UT Systems	33
Flush Lid for TT and UT Systems	34
Flat Lid for TT and UT Systems	35
Walk-on Tray Lid Aluminum	36
Box Perimeter & Lid Forming	37
Lid Forming Molds & Kits - Inclined	38
Lid Forming Molds & Kits - Cantilever	39
Lid Descenders & Transition Pieces UT	40
Tubes and Leading Edges	41
Flush Track Kits and Hardware	42
Reusable Coping Forms & Kits	43
Vinyl Liner Encapsulation Kits	44
Gunite & Fiberglass Encapsulation Kits	45
Hardware for Encapsulation Kits	46
ManualTrak™ Mechanism	47
Discontinued Parts	48-49

© Latham Pool Products, Inc. 2019 All rights reserved.

Infinity 4000™ Systems

	RECESSED MECHANISMS
IM4010-L3-GLD	Infinity 4000™ Recessed Left w / Bison Motor
IM4010-L3LV-GLD	Infinity 4000™ Recessed Left w / Bison Motor & Low Voltage Circuit Board
IM4010-R3-GLD	Infinity 4000™ Recessed Right w / Bison Motor
IM4010-R3LV-GLD	Infinity 4000™ Recessed Right w / Bison Motor & Low Voltage Circuit Board
	DECK MOUNT MECHANISMS
IM4000-L3-GLD	Infinity 4000™ DM Left w / Bison Motor
IM4000-L3LV-GLD	Infinity 4000™ DM Left w / Bison Motor & Low Voltage Circuit Board
IM4000-R3-GLD	Infinity 4000™ DM Right w / Bison Motor
IM4000-R3LV-GLD	Infinity 4000™ DM Right w / Bison Motor & Low Voltage Circuit Board

	RECESSED MECHANISM - No Motor
IN4010-R-GLD	Infinity 4000™ Recessed Right with Tube End Casting
IN4010-L-GLD	Infinity 4000™ Recessed Left with Tube End Casting
	DECK MOUNT MECHANISM - No Motor
IN4000-R-GLD	Infinity 4000™ Deck Mount Right with Tube End Casting
IN4000-L-GLD	Infinity 4000™ Deck Mount Left with Tube End Casting

	HYDRAULIC RECESSED MECHANISMS
IM4010-LH2-GLD	Infinity 4000™ Recessed Mechanism Left Side
IM4010-RH2-GLD	Infinity 4000™ Recessed Mechanism RT Side
	HYDRAULIC DECK MOUNT MECHANISMS
IM4000-LH2-GLD	Infinity 4000™ Deck Mount Mechanism Left Side
IM4000-RH2-GLD	Infinity 4000™ Deck Mount Mechanism RT Side

© Latham Pool Products, Inc. 2019 All rights reserved.

Infinity 4000™ Mechanism Assembly

2017 Replacement Parts

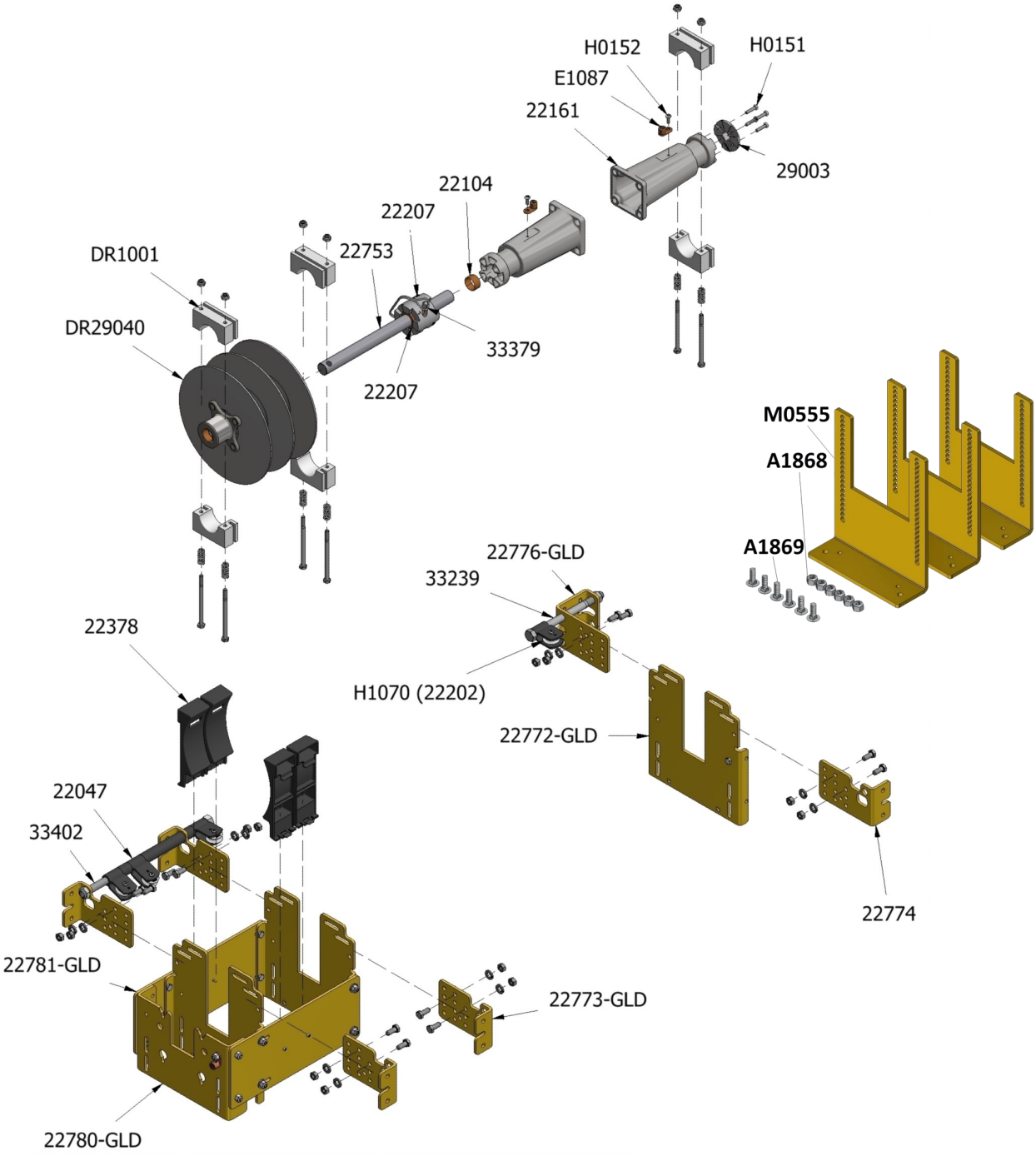

© Latham Pool Products, Inc. 2019 All rights reserved.

Infinity 4000™ Mechanism Assembly

2014 Replacement Parts

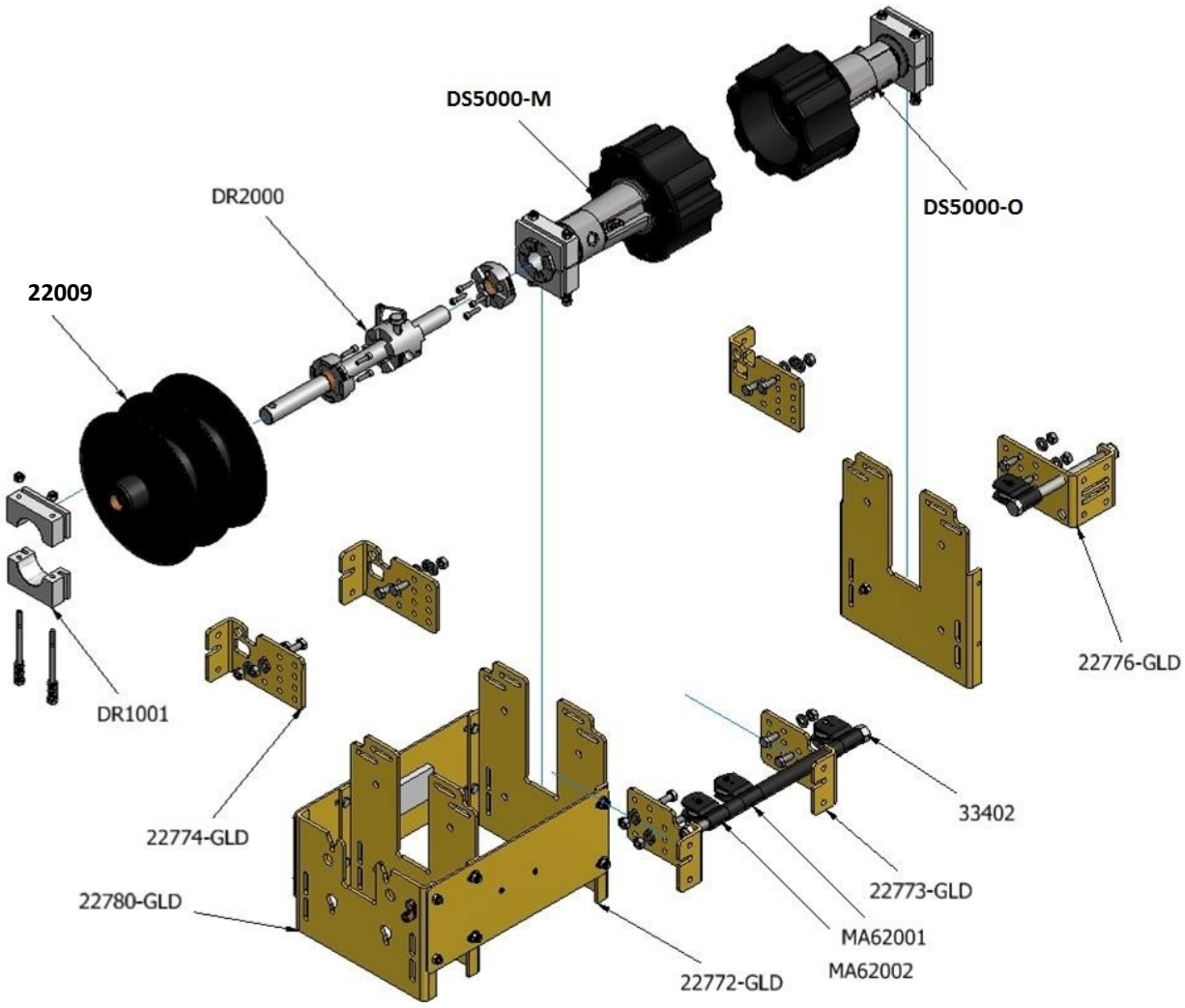

© Latham Pool Products, Inc. 2019 All rights reserved.

Standard 3 Wire Bison Motor w/ Limit Control

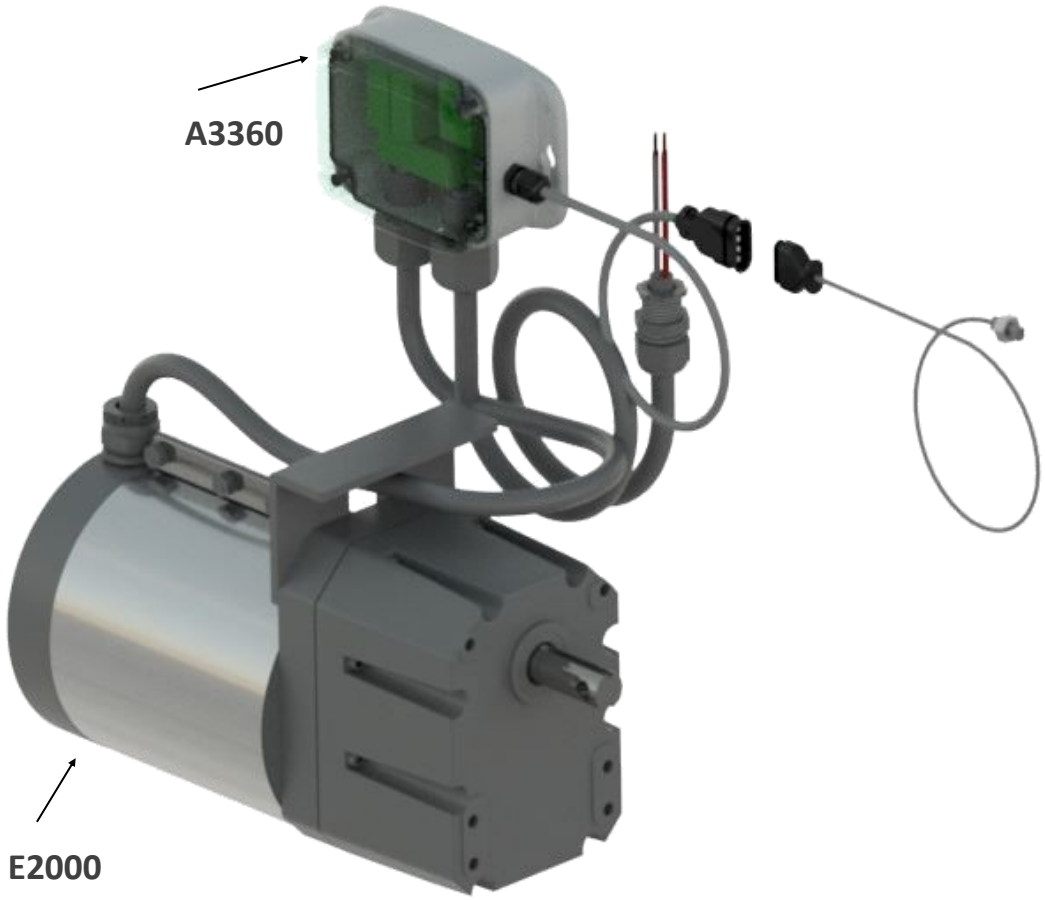

A3361	Standard 3 Wire Motor w/ Limit Control 110V
E2000	Latham AC Motor 115VAC
A3360	3 Wire Limit Control & Sensor

© Latham Pool Products, Inc. 2019 All rights reserved.

End Casting Assembly

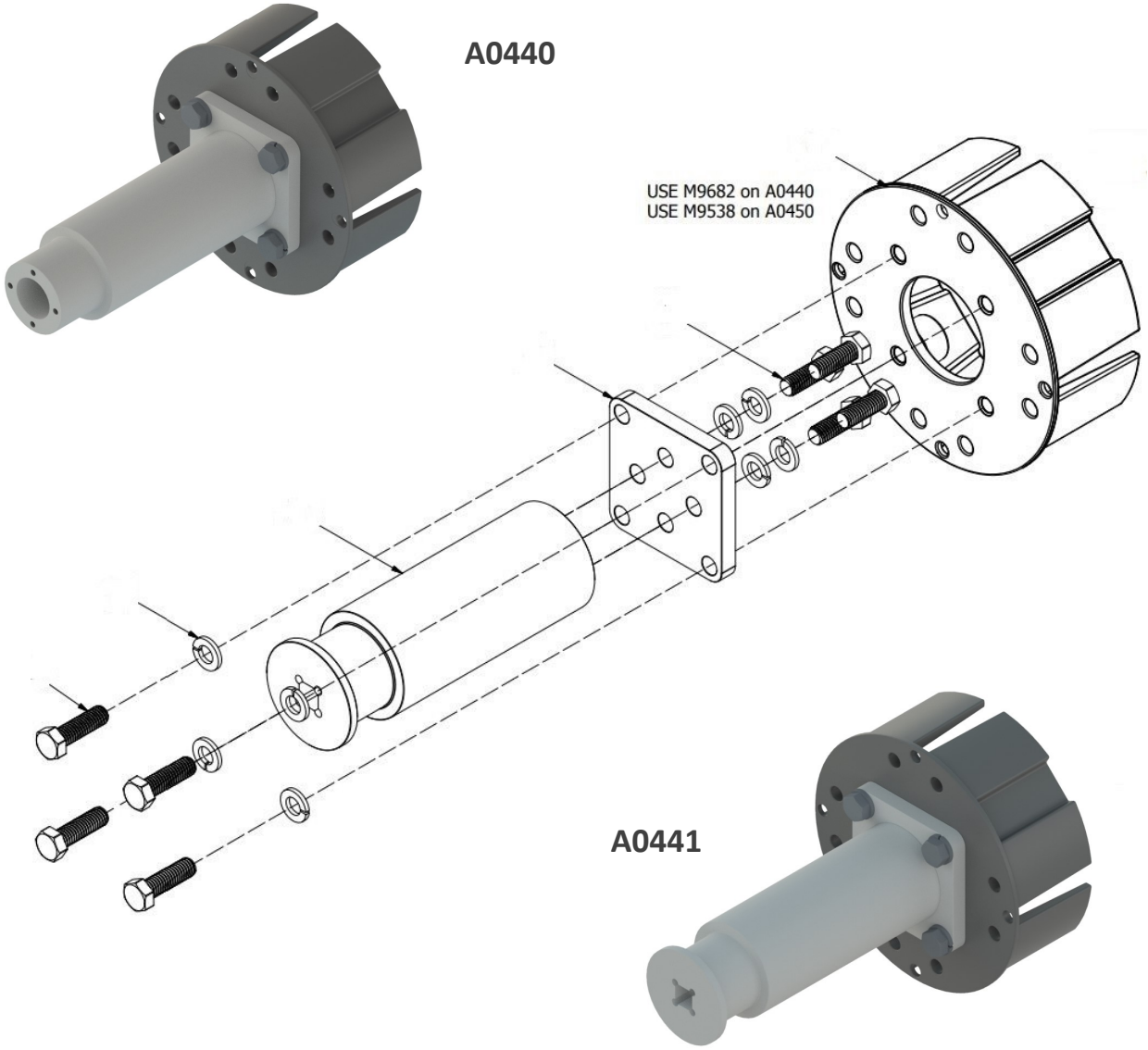

A0440	2016 Retro NME End Casting Assembly
A0441	2016 Retro ME End Casting Assembly

© Latham Pool Products, Inc. 2019 All rights reserved.

Universal Double/Single Dog Assembly

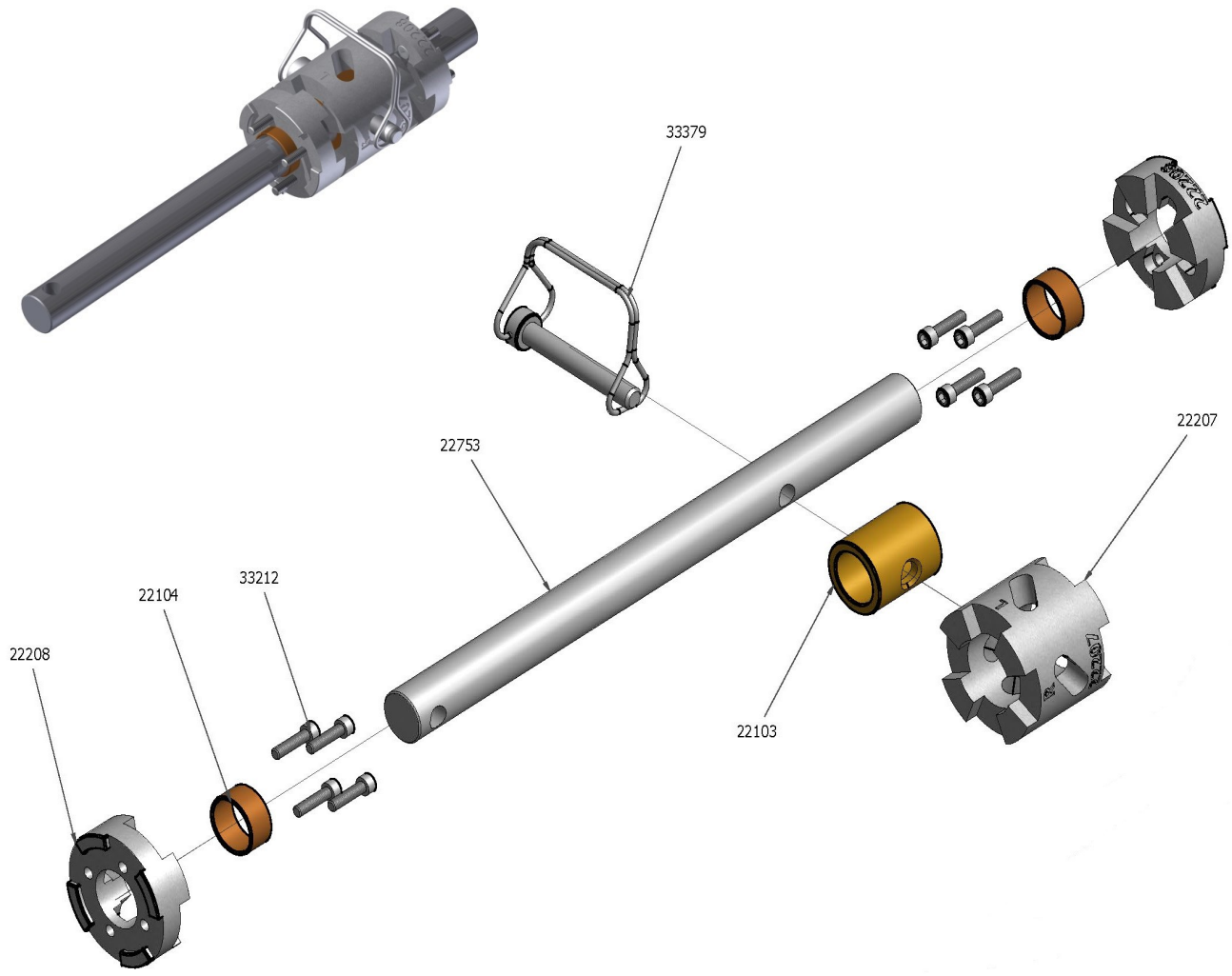

DR2000	Universal Double / Single Dog, 7/8” Shaft
22208	Universal Single Dog
22207	Universal Double Dog

© Latham Pool Products, Inc. 2019 All rights reserved.

Top Track Slider Assembly

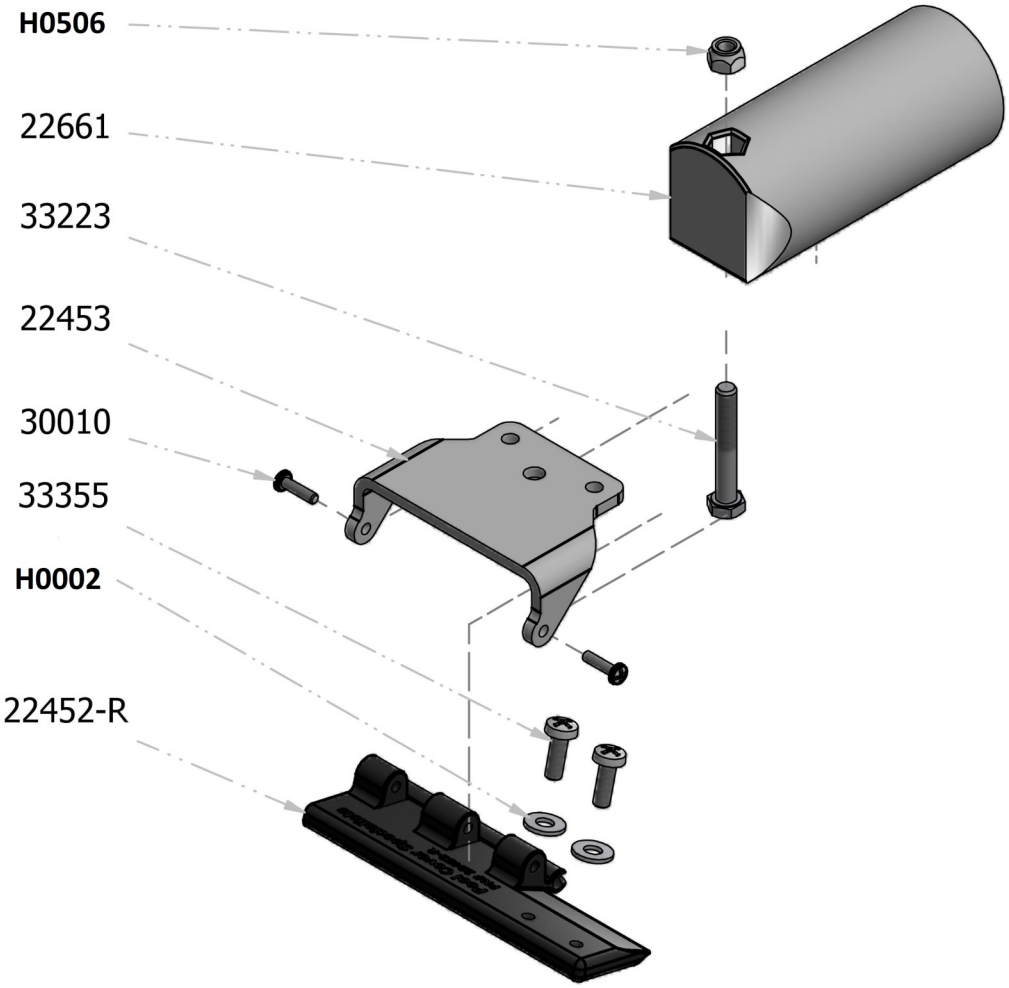

TT2009	Top Track Slider Assembly for 2-1/2” LE
SL22661	Replacement Slip Dowel Kit
22452-L or R	Top Track Slider 4” LE

© Latham Pool Products, Inc. 2019 All rights reserved.

Molded Top Track Wheel Assembly

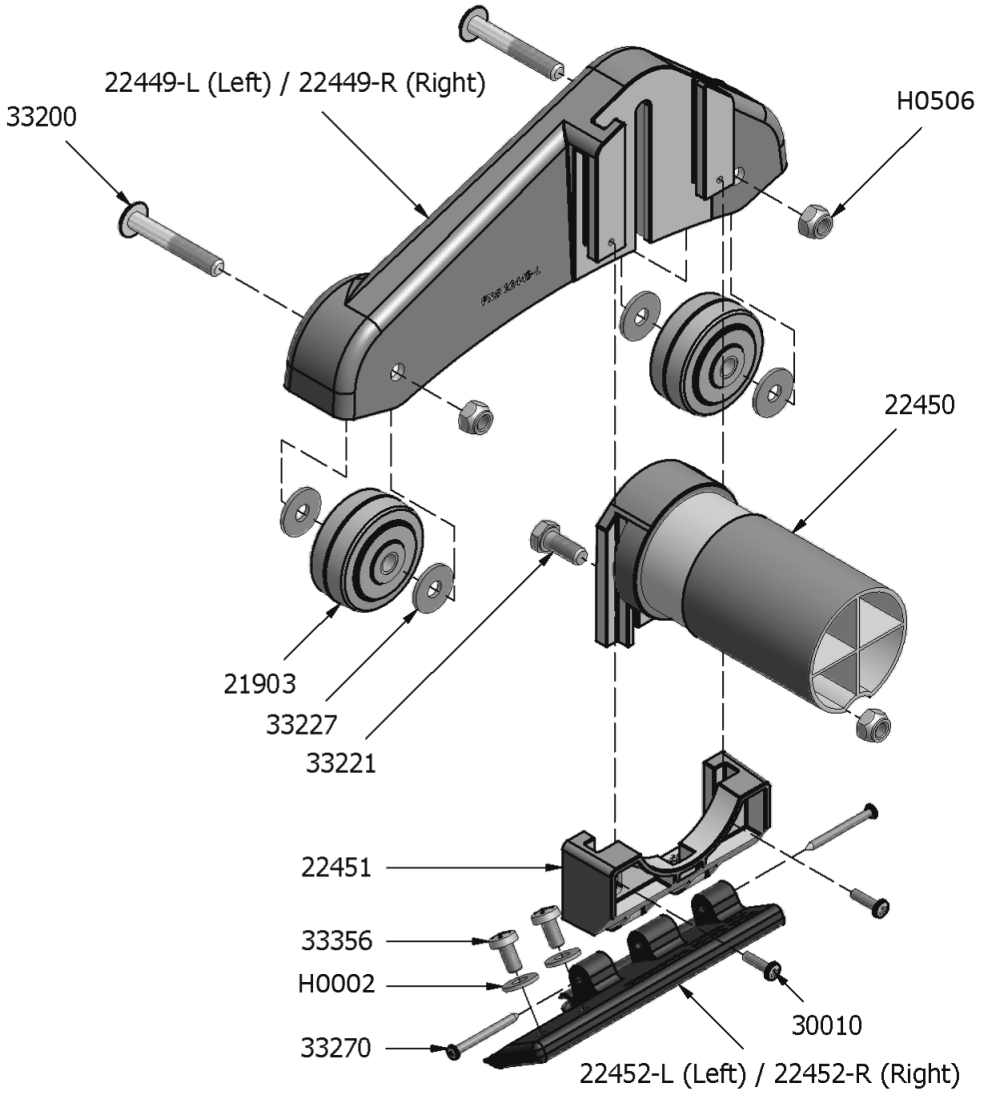

TT2010	Molded Top Track Wheel Assembly
22452-L or R	Top Track Slider 4” LE
TT21903	Wheel, Colson 2”

© Latham Pool Products, Inc. 2019 All rights reserved.

Top Track Wheel Assembly

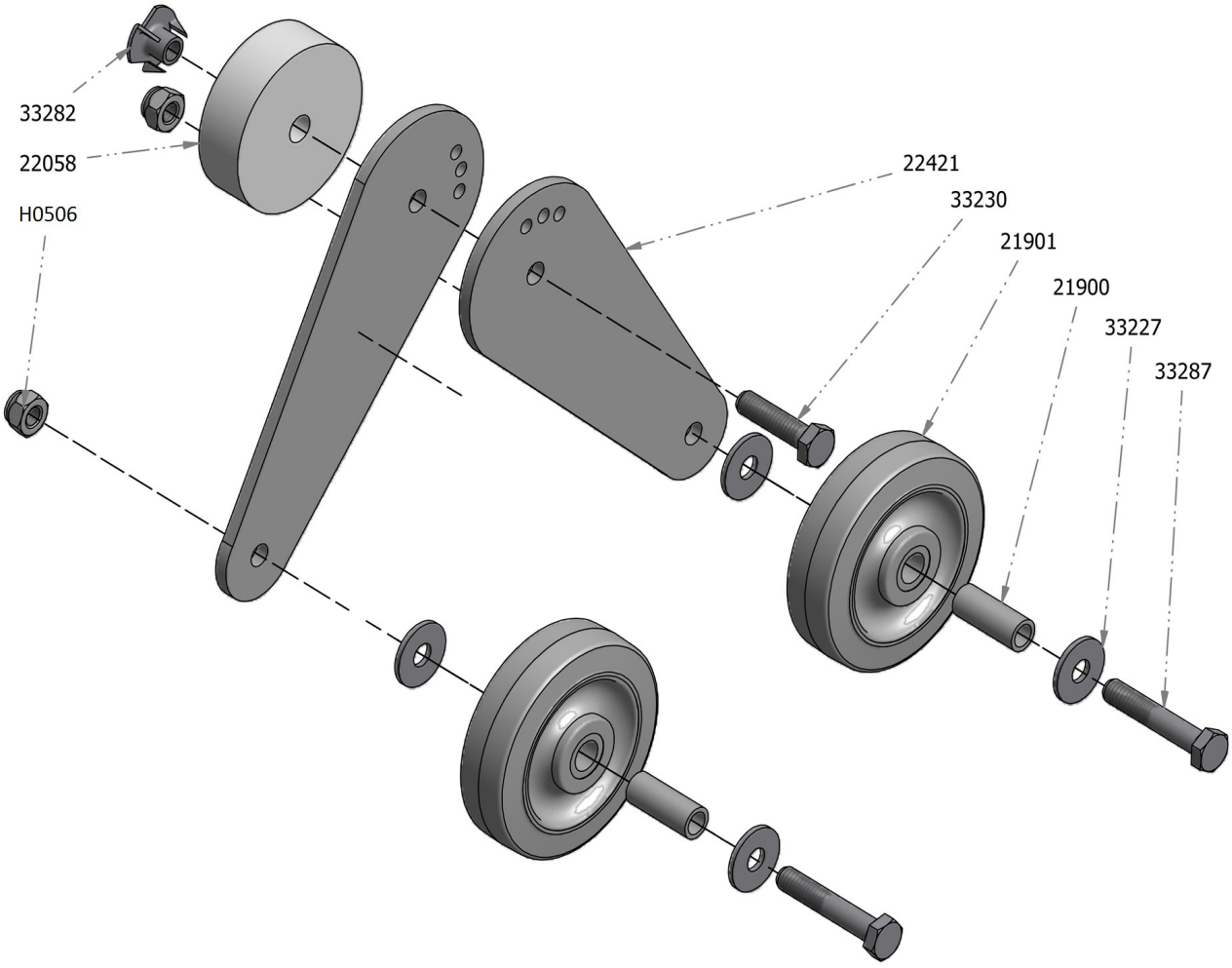

TT1003	Top Track Wheel Assembly for 2-1/2” LE
TT21901	Wheel, 3” Colson Replacement Kit
TT1005	Leading Edge Dowel Assembly

© Latham Pool Products, Inc. 2019 All rights reserved.

Outside Slider Assembly UT

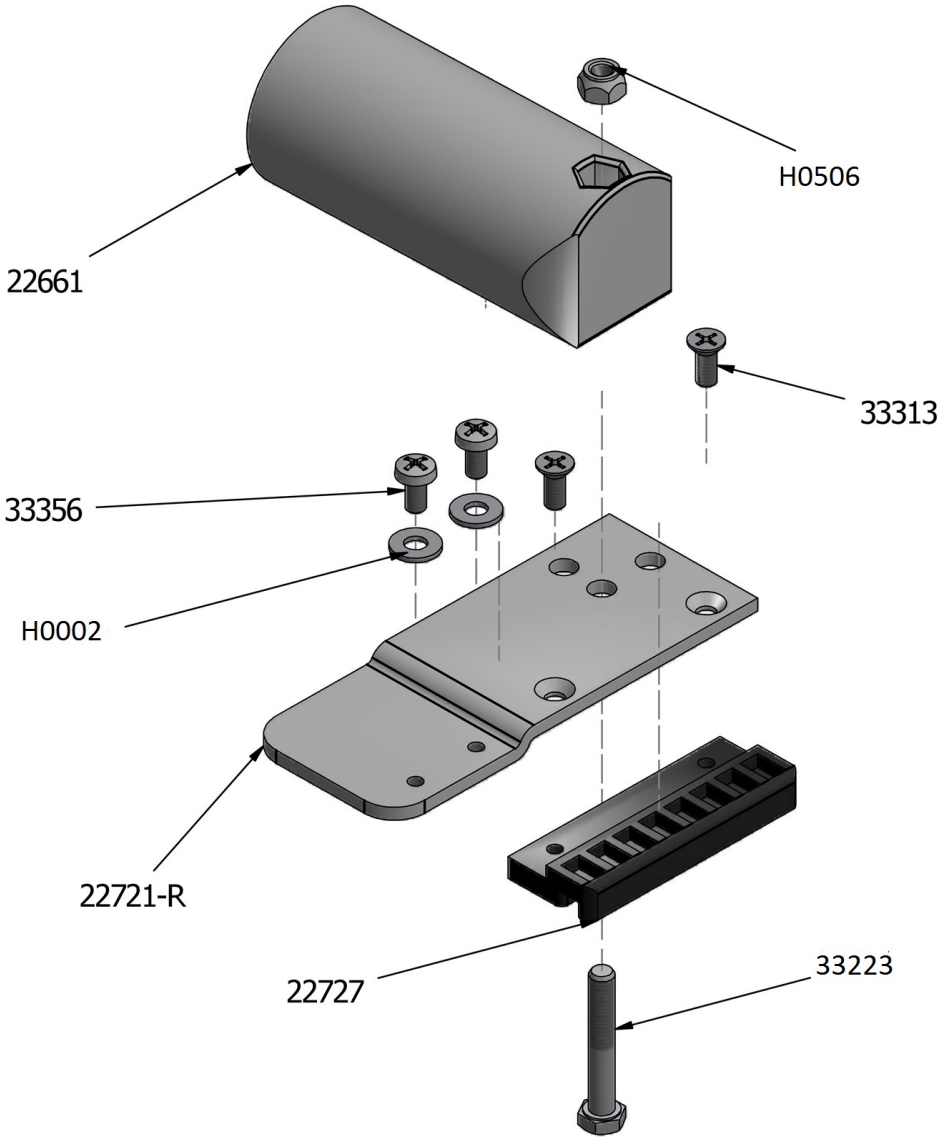

UTO1016	Slider Assembly, UT for 2-1/2” LE
SL22661	Replacement Slip Dowel Kit
SL22721	Under Track Slider Bracket Kit
SL22727	Under Track Outside Slider

© Latham Pool Products, Inc. 2019 All rights reserved.

Slider Assembly 3” Extended UT

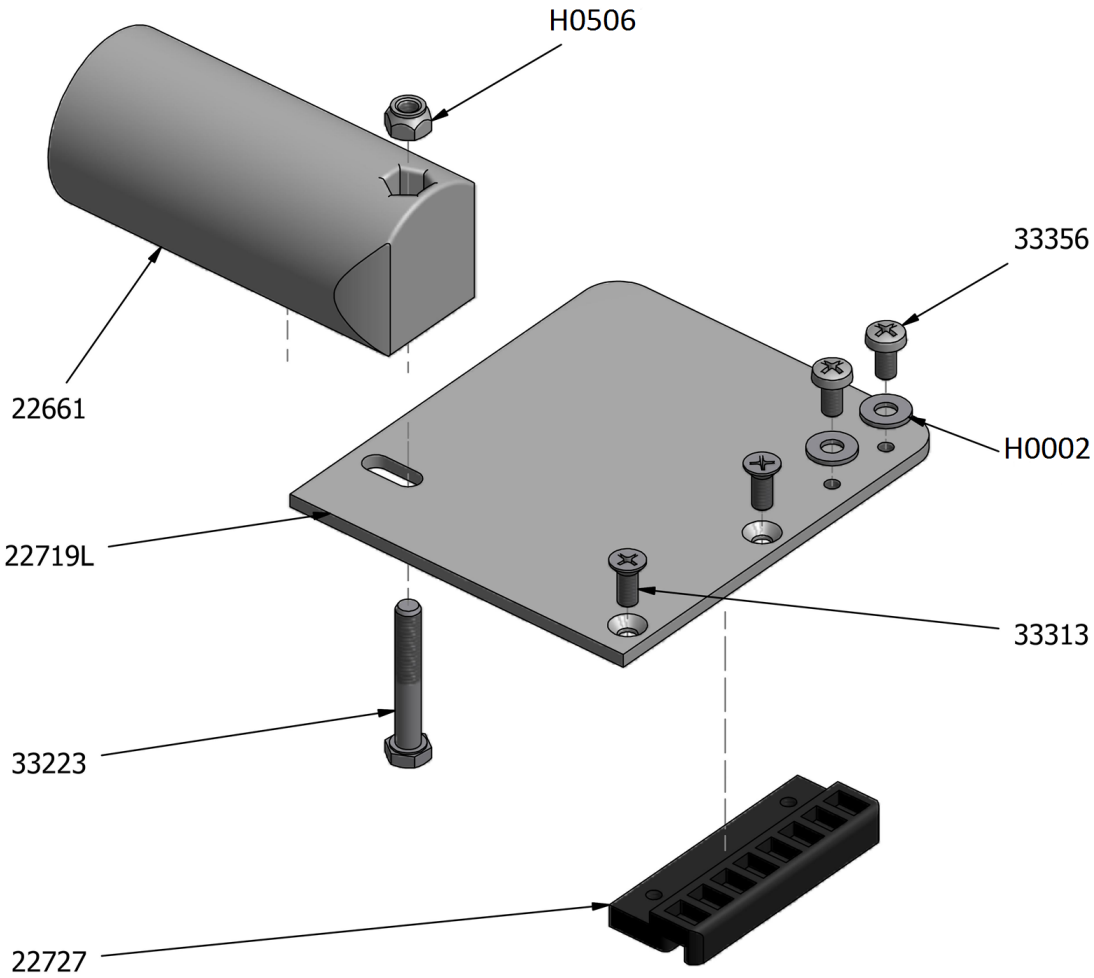

UTO1016-3	Slider Assembly 3” Extended Under Track
SL22661	Leading Edge Slip Dowel
22719L or R	Extended Slider Plate 3” (Left or Right)
SL22727	Slider, Under Track Outside Slider

© Latham Pool Products, Inc. 2019 All rights reserved.

Standard UT Slider Assembly

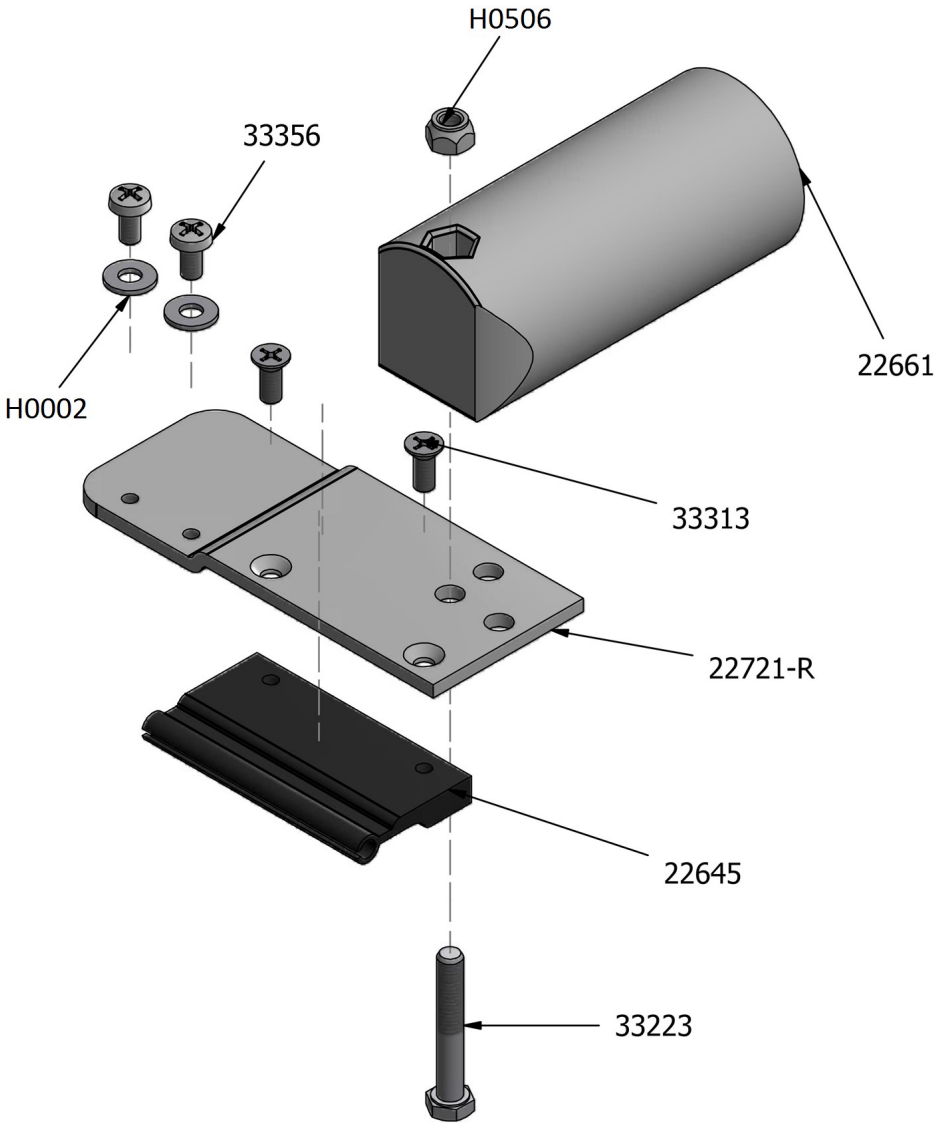

UT1015	Under Track Slider Assembly
SL22661	Leading Edge Slip Dowel
SL22721	Flat Slider Plate (Left & Right)
SL22645	Rectangle Short Slider

© Latham Pool Products, Inc. 2019 All rights reserved.

Slider Assembly UT for 4” LE

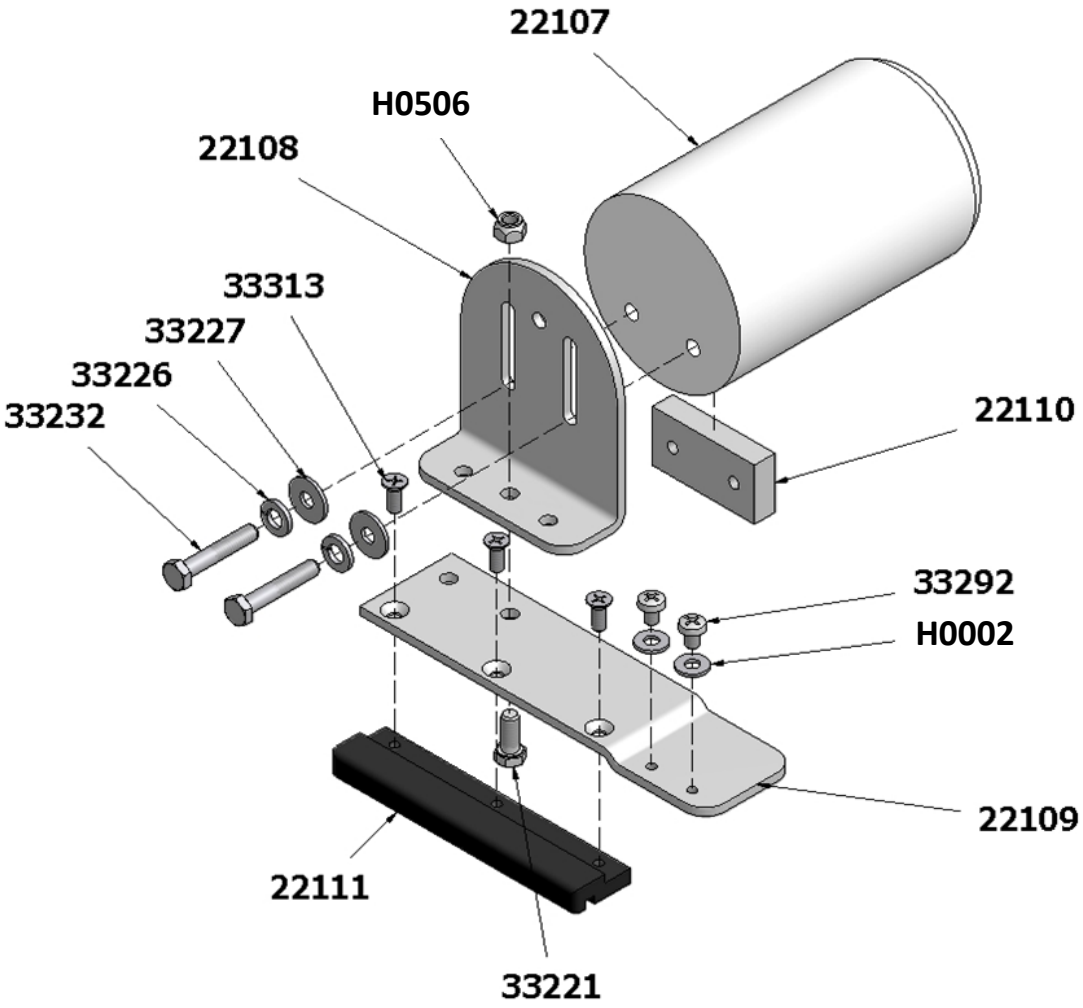

UTO1018	LE Outside Slider
22111	4” LE UT Snap-in Slider

© Latham Pool Products, Inc. 2019 All rights reserved.

Slider Assembly UT for 2-1/2 x 4-1/2” LE

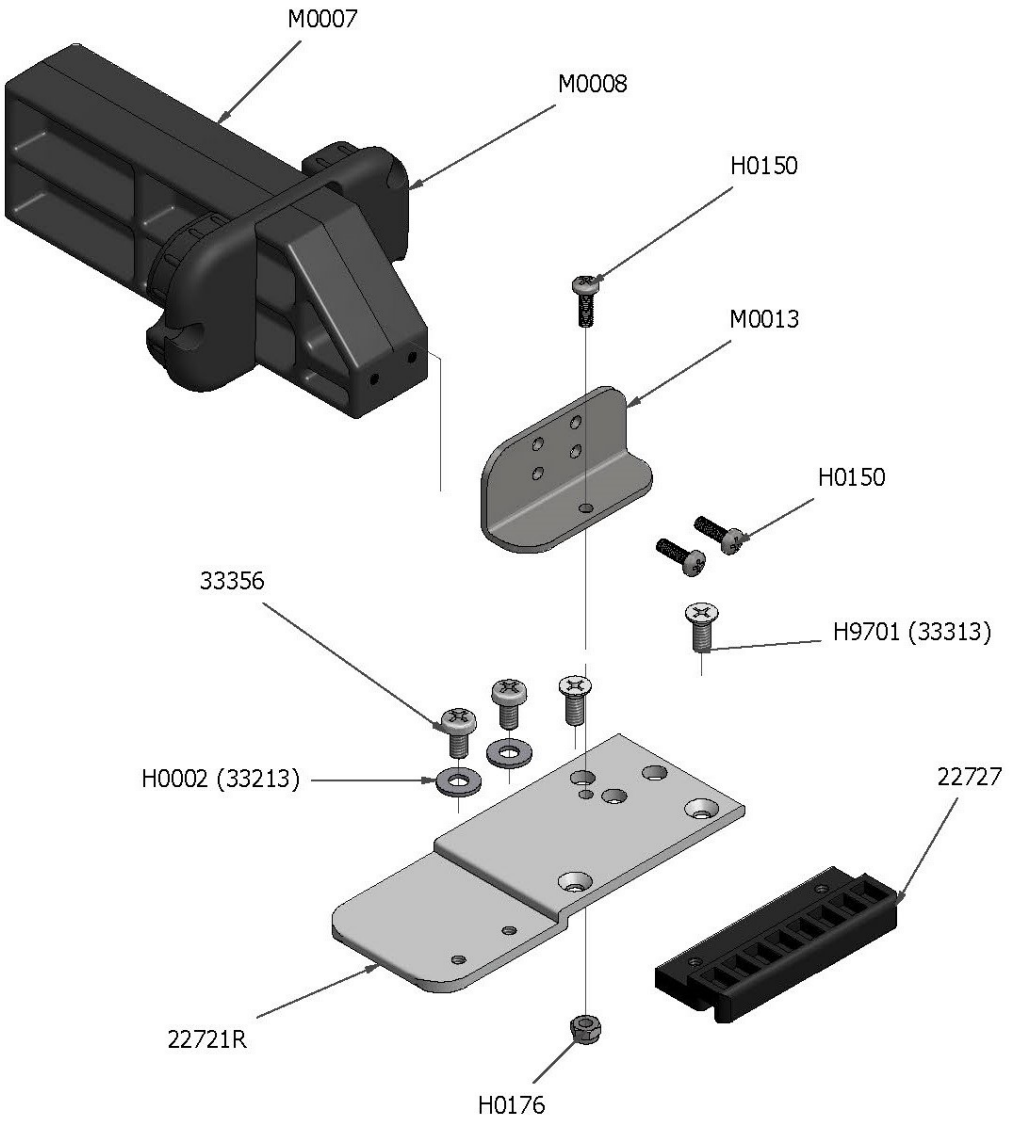

SL22310	2-1/2 x 4-1/2” LE Slider Assembly (Left & Right)
SL22301	2-1/2 x 4-1/2” LE Slider Assembly Left
SL22300	2-1/2 x 4-1/2” LE Slider Assembly Right
22727	Snap-in Under Track Slider

© Latham Pool Products, Inc. 2019 All rights reserved.

Vanishing Edge Assembly

	A3420 A3421	Guide Feed Assembly for UT VE LEFT/ Motor RIGHT Guide Feed Assembly for UT VE RIGHT/ Motor LEFT
	A3730 A3731	VE Kit - Redirects the Rope Under the Roll-up Tube, LEFT VE Kit - Redirects the Rope Under the Roll-up Tube, RIGHT
	A3451 A3452	Bottom VE Guide Feed RIGHT Bottom VE Guide Feed LEFT
	M3600	Teardrop Shaped VE Spacer
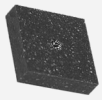	M3818	Spacer for VE Track 1-1/2” x 1-1/2” x 3/8”
	A2873 A2874	Slider Assembly UT Vertical VE LEFT Slider Assembly UT Vertical VE RIGHT
	M9501 M9502 M9503	VE LE Support for 2-1/2” LE 3-1/2” VE LE Support for 2-1/2” LE 4-1/2” VE LE Support for 2-1/2” LE 5-1/2”
	A0265 A1414 A1415	Diverter Pulley for VE, Mounts Behind Guide Feed L or R/ ME or NME Pulley Endcap TT for Vanishing Edge VE SS RIGHT Pulley Endcap TT for Vanishing Edge VE SS LEFT
	A1417	Pulley Endcap UT w/ Stop VE Side

© Latham Pool Products, Inc. 2019 All rights reserved.

IDEC Key Switch Assembly

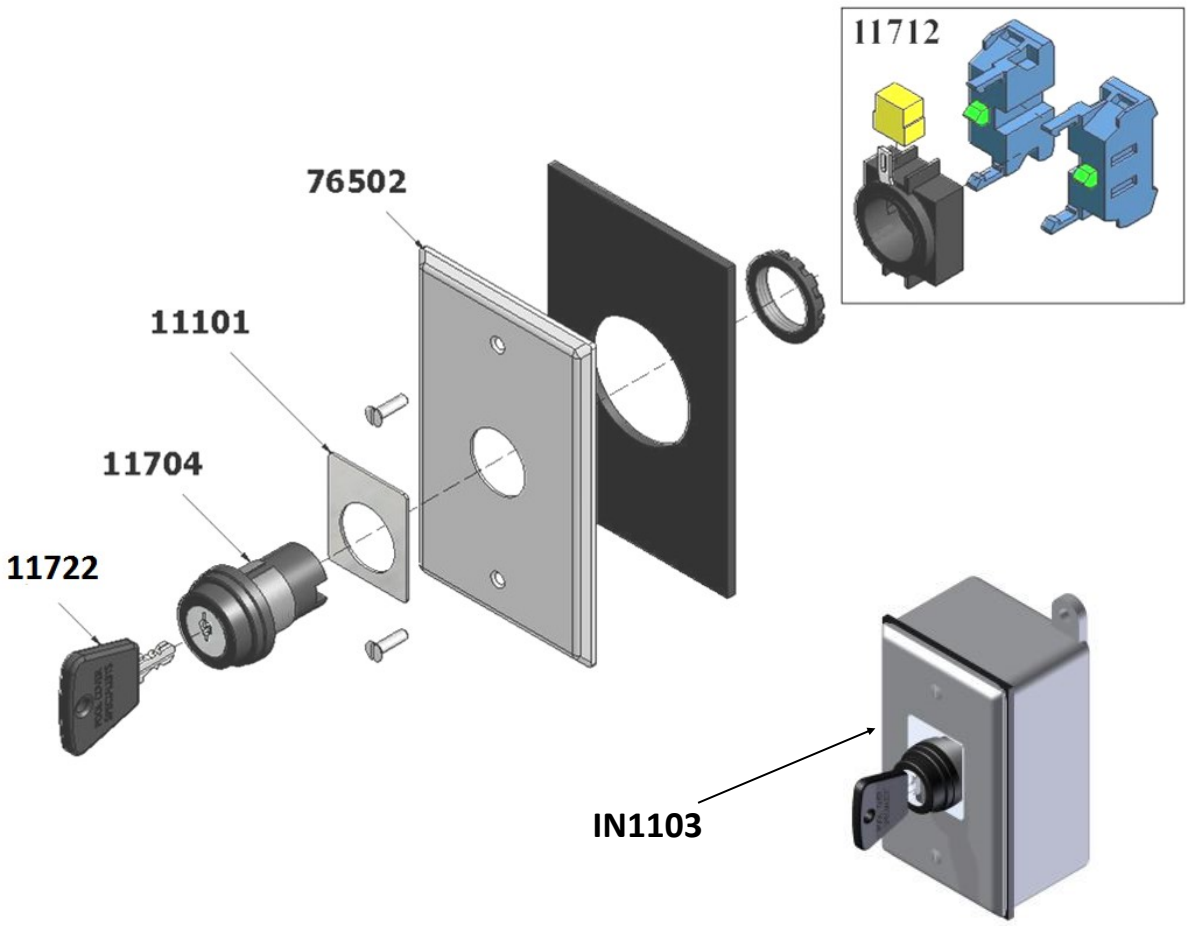

IN1104	IDEC Key Switch Assembly w/o Box
IN1103	IDEC Key Switch with Box
11722	IDEC Key

© Latham Pool Products, Inc. 2019 All rights reserved.

Polymer Housing

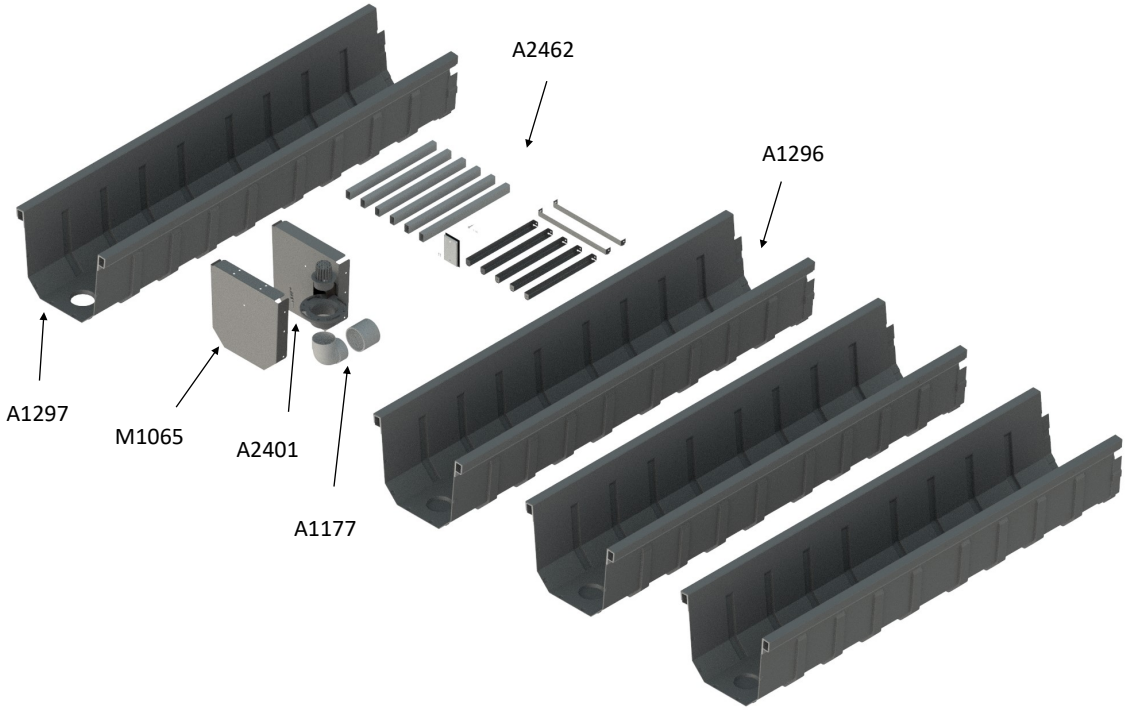

A2400 A2462	Polymer Housing Assembly 24’ (order mounting kit separately) Polymer Housing Hardware Kit 24’ (order mounting kit separately)
A2402 A2407	Polymer Housing Assembly 18’ (order mounting kit separately) Polymer Housing Hardware Kit 18’ (order mounting kit separately)
A2408	Polymer Housing 6’ Extension w/ Splice
A2404	Polymer Housing 311 Mounting Kit UT (for VL pools)
A2405	Polymer Housing 311 Mounting Kit UT (for gunite pools)
A2403	Polymer Housing 311 Mounting Kit RT (for gunite or VL pools)
A2849 A2850	Polymer Housing 311 Mounting Kit UT (for fiberglass pools) Polymer Housing 311 Mounting Kit UT (for fiberglass pools) w/ Standoff Brackets
A3430 A3551	Housing Turnbuckle Backfill Brace Housing Turnbuckle Brace Set of 5

© Latham Pool Products, Inc. 2019 All rights reserved.

Aluminum Bench

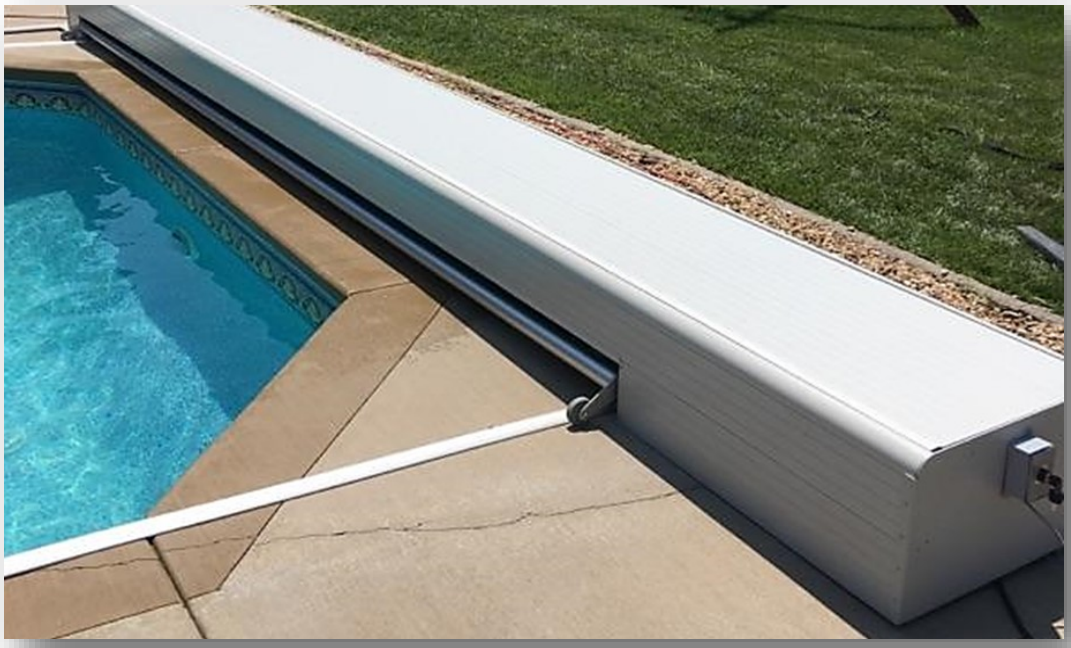

A3358	Aluminum Bench 23” Wide 24’ Long
A3385	4 ft Bench Extension Kit for A3358
A3380	Aluminum Bench 23” Hardware Kit
M1051	Aluminum Bench 23” Bracket
M1053	Aluminum Bench Attachment Bracket

© Latham Pool Products, Inc. 2019 All rights reserved.

Deck Mount Plastic Housings

A0240	Housings Plastic GRAY LEFT/ RIGHT SET
H9590	Deck Mount Motor End Cover GRAY
H9650	Deck Mount Non-motor End Cover GRAY

© Latham Pool Products, Inc. 2019 All rights reserved.

Slider Assemblies

	SL22039	Slider, 2” Extended Universal
	SL22049	Slider, Universal
	SL22070	Slider, 6” Under Track (Used on 4” Leading Edge)
	SL22071	Slider, 6” Slip-in Outside Slider (Used on 4” Leading Edge)
	SL22438	Slider, Universal 1.5” Extended
	SL22645	Slider, Short Rectangle
	SL22727	Slider, Under Track Snap-in
	SL22452	Slider, Molded Top Track
	SL22310	2.5 x 4.5 LE Slider Assembly (Used on Rectangle Leading Edge)
	A3525	403 Slider 2.5” LE SET
	M3625	403 Detachable Slider

© Latham Pool Products, Inc. 2019 All rights reserved.

Slider Comparison Chart

	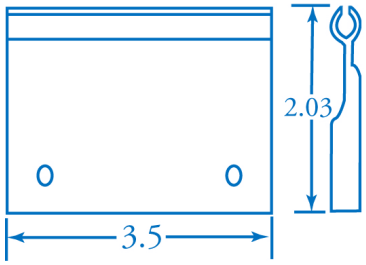	**22645** Rectangular Short Slider. This is the new replacement for the Snap-in Slider. (Used: 2006 to Present)
	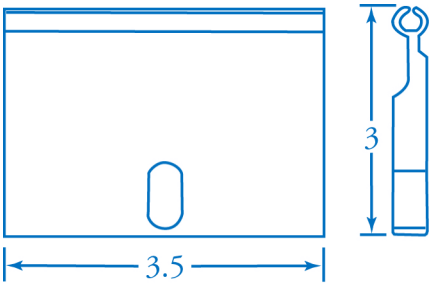	**22049** Universal TT Slider. (Used: 1995 to Present)
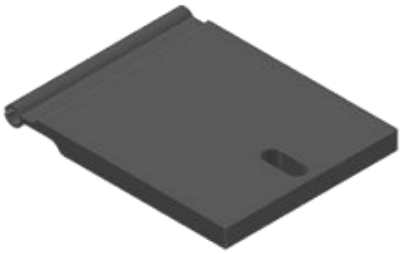	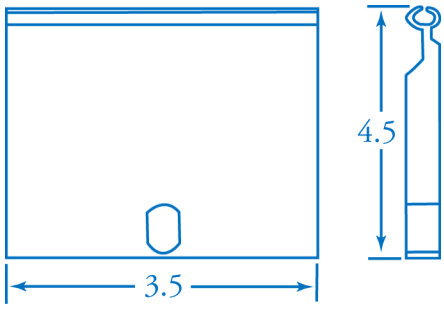	**22438** 1-1/2” Extended TT Slider. (Used: 2000 to Present)
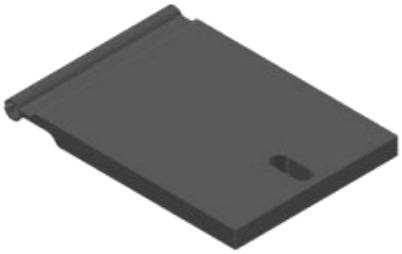	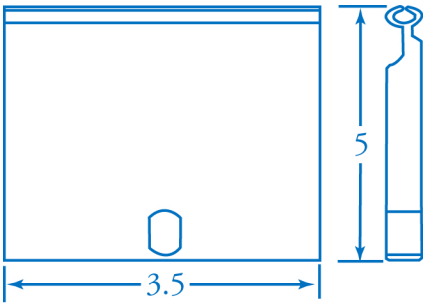	**22039** 2” Extended TT Slider. (Used: 2000 to Present)
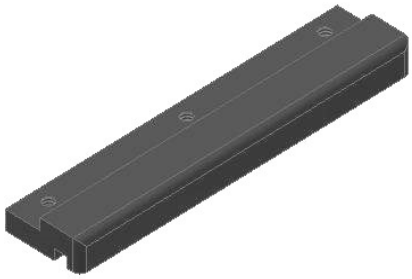	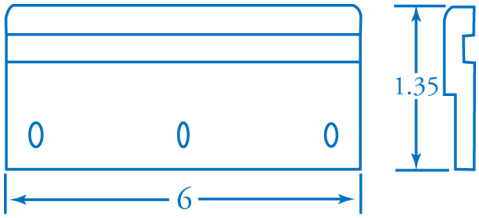	**22111** 4” LE Snap-in Slider Used with 4” Leading Edge. (Used: 2008 to Present)

© Latham Pool Products, Inc. 2019 All rights reserved.

Slider Comparison Chart

	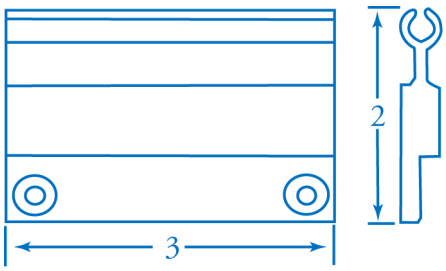	**22646** Triangular Slider, used primarily outside of Utah. (Used: 2002-2004)
	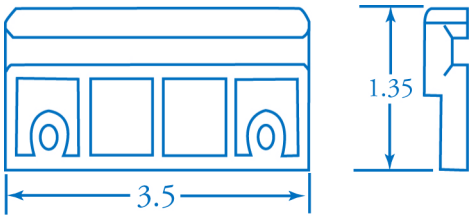	**22727** Standard Outside Slider. (Used: 2006 to Present)
	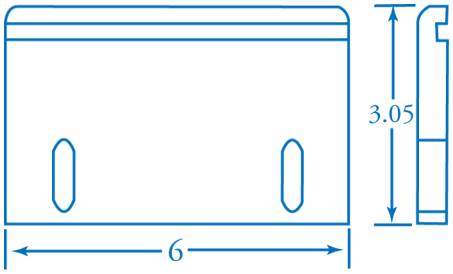	**22071** Slip-in Outside Slider used on 4” LE. (Used: 2000 to 2008)
	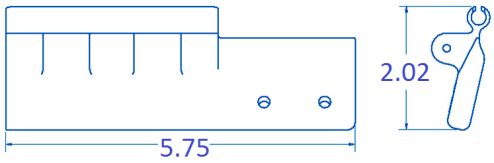	**22452 - (L or R)** Molded TT Slider for 4” LE. Side-specific, a pair of these is included with TT2009 and TT2010. (Used: 2009 to Present)

© Latham Pool Products, Inc. 2019 All rights reserved.

Slider Comparison Chart

	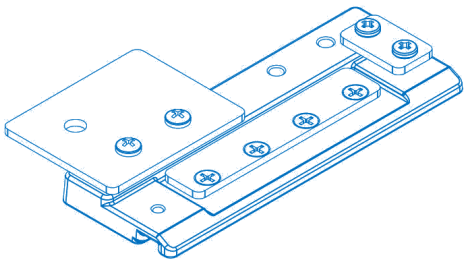	**A3411** (Left) **A3410** (Right) This is the new slider for the 403 track with a 2.5 leading edge. **(Used: 2018 to Present)**
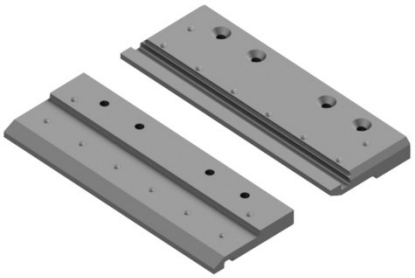	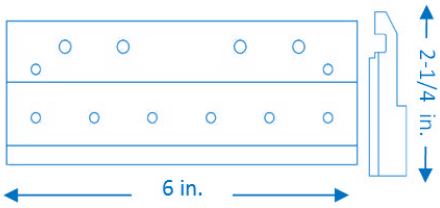	**M3625 - UT Detachable Rope Slider** This is the new 403 UT Detachable Rope Slider. **(Used: 2018 to Present)**

© Latham Pool Products, Inc. 2019 All rights reserved.

Track & Hardware for TT Systems

	54817D 54817	Universal Top Track, Drilled 22 ft. Universal Snap-down Top Track, 22 ft. (Used with Snap-locks, Not Pre-drilled)
	TT2042	Top Track Installation Kit
	TT1010	Top Track Speed Guide Kit SS
	SN1000	Snap-down Top Track Kit
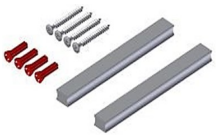	TT22003	Top Track Splice Kit
	TT1020	Top Track SS Pulley Cartridge Set

© Latham Pool Products, Inc. 2019 All rights reserved.

Track & Hardware for Under Track Systems

	X0614 Track UT 403 for Detachable Rope 21’ STD (no mounting holes) X0820 Track UT 403 for Detachable Rope 21’ w/ Mounting Holes X0674 Track UT 403 for Detachable Rope 21’ BRONZE A1039 Track Conversion Package UT 20’ LE (2-1/2”) A1040 Track Conversion Package UT 24’ LE (2-1/2”) Anodized A1058 Track Conversion Package UT 403 TL 42’, 20’ LE
	X0765 Protector for Encapsulated Track, Covers Track Face During Construction 21 ft
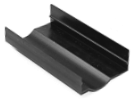	X0666 Protector for UT 403 & 801 Rigid PVC Covers Track During Construction 21 ft
	A1923 Splice Kit for Track UT 403
	A0407 Bracket Encapsulated UT w/ Screws, Anchors & Nuts SET
	A0958 Pulley Endcap Assembly Twist Lock UT 817
	A0996 Guide Feed UT 801/403 STD w/ Hardware Each UT1060 Guide Feed UT 403 SET
	A1792 UT Encapsulation Track Hardware Kit
	A1793 UT Screw-on Track Hardware Kit
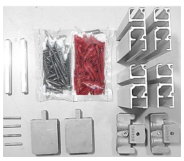	A0953 Track Package UT 403 for Detachable Rope (4 guides, pulleys, guide feed, etc.)

© Latham Pool Products, Inc. 2019 All rights reserved.

Replacement Parts Pre - 2018
Under Track Systems

	55031	Standard Under Track for Retainer 22 ft.
	UT1010	Under Track SS Speed Guide Kit
	UTO2500	Under Track Installation Kit For Retainer Track
	UTO1500	Under Track Installation Kit For Drill-up Track
	UT1013	Under Track Split Guide Kit For Old Style 2 Channel Track, Plastic
	UTO3000	Under Track Splice Kit
	UTO1800	Under Track SS Pulley Cartridge Assembly

© Latham Pool Products, Inc. 2019 All rights reserved.

Competitors Hardware

	22035	Pool Saver Under Track Guide Pair
	RP1036 RP1037	Cover Pools UT Slider w/ Plate LEFT Cover Pools UT Slider w/ Plate RIGHT
	A4020	Cover Pools Rotary Encoder Assembly
	11002	Cover Pools Sensor, Hamlin N.C.
	RP1003	Cover Pools Guide UT Pair
	RP8075	Aquamatic Universal Screw-on Slider w/ 4 screws
	RP8073 RP8074 RP8064 RP8063	Aquamatic TT Guide Feed LEFT Aquamatic TT Guide Feed RIGHT Aquamatic UT Guide Feed LEFT Aquamatic UT Guide Feed RIGHT
	A1153	Coverstar Under Track Slider Assembly Set - Pre 2003
	A1100	Coverstar Slider Assembly For Detachable Rope Set
	M9886	Coverstar Stop Block Slider TT

© Latham Pool Products, Inc. 2019 All rights reserved.

Motors & Motor Controllers

	A3361	Standard 3 Wire Motor with Limit Control
	A3552	230V 2018 Motor w/ Feature Controls
	A3100	220V Hydraulic Power Pack Assembly (2016)
	A3101	Hydraulic Control Assembly
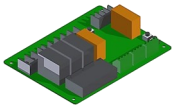	E0301 A3481	Hydraulic Motor Feature Control Multi Valve Board
	HE1000	Hall Effect Sensor Kit
	A3360	3 Wire Limit Control & Sensor
	A3317	Feature Control Assembly for Electric Motors
	10728	2012 Electric Motor Smart Control Board 110V - 240V
	IN1128	Water Feature Interrupter
	IN1129	Water Pump Interrupter
	10730	2012 Aux Relay Control Board 110V - 240V

© Latham Pool Products, Inc. 2019 All rights reserved.

System Controllers

	IN1103	IDEC Key Switch, Full Assembly
	IN1104	IDEC Key Switch Assembly w/out Box
	ID1103	IDEC Key Switch
	TP2500	Touch Sensitive Touch Pad, Full Assembly
	A2469-B A2519-B A2523-B A2525-B	Touch Pad STD LV Touch Pad LV Touch Pad RF Module Remote Touch Pad Host Assembly

© Latham Pool Products, Inc. 2019 All rights reserved.

Lid and Bench Brackets

	A1932 Lid Bracket adj. arm 13” Walk-on & Base SS A0507 Lid Bracket adj. arm 12” Walk-on STONE Lid 7.5” Base Aluminum A1421 Lid Bracket adj. Assembly 13” Walk-on with 7-1/2” Base Aluminum A3326 Lid Bracket Width Extension Kit SS 418 A2393 Lid Bracket Ext Kit 15 - 17” SS 11.75” Long A2364 Lid Bracket Ext Kit 17 - 19” SS 13.75” Long A2376 Lid Bracket Ext Kit 19 - 21” SS 15.75” Long A2365 Lid Bracket Ext Kit 21 - 23” SS 17.75” Long A2392 Lid Bracket Ext Kit 23 - 25” SS 19.75” Long
	A0151 Lid Bracket Walk-on HD SS 3/8” Specify Size (1 week ship)
	M4105 Standard Under Track Lid Bracket
	M4106 Standard Top Track Lid Bracket
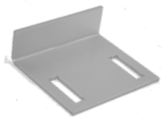	M3970 Lid Bracket Walk-on End 5” Aluminum
	M3806 Lid Bracket Walk-on End 10” Aluminum
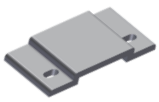	22662 Extended Drop-in Lid Mount, 5/16” Slots
	A2409 Lid Bracket w/ Bolt for 309 Riser Panel (X0944) SS for 14” Box
	A3409 Lid Bracket w/ Bolt for 419 Zero Reveal Riser
	A0231 Bench Bracket Center 14” High 21” Wide (1 week ship) A0008 Bench Bracket Center 15” High 19” Wide (1 week ship) A0154 Bench Bracket Center 15” High 21” Wide (1 week ship) A0002 Bench Bracket Custom Size (1 week ship)

© Latham Pool Products, Inc. 2019 All rights reserved.

Aluminum Lid for TT & UT Systems

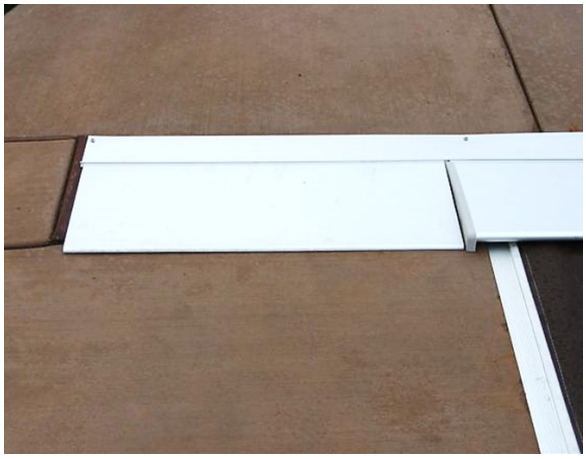

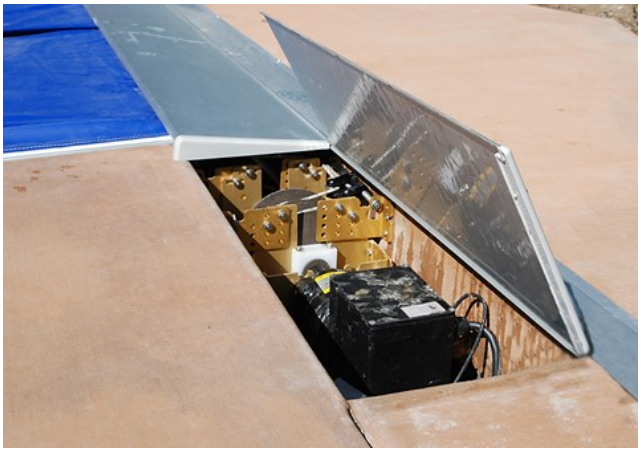

X0004 X0817	Lid Aluminum 11” STD Per ft. Lid Aluminum STD 20’ 6”
X0121 X0659	Lid Aluminum Motor End Per ft. Lid Non-motor End Aluminum Per ft.
X0943 X0951	Lid Hinge 8” Aluminum 24 ft. Lid Hinge 8” Aluminum Per ft.
A0376	Lid Wedge Set of 2
A0025 A0026	Lid Kit Aluminum, 8” Hinge for 20’ Track Space UT Lid Kit Aluminum, 8” Hinge for 20’ Track Space TT
A1784	Lid Hinge Attachment Hardware Kit
A0375	Lid Endcap Set of 2

© Latham Pool Products, Inc. 2019 All rights reserved.

Flush Lid for TT & UT Systems

A3560 A3570	Flush Lid Kit 403 PCS Reusable Forms Flush Lid Kit 403 PCS 1 pc Encapsulation
X0008 X0009	6” Flush Lid Panel Snap 7-1/2” Flush Lid Panel Snap
A2410 A2412 A2413 X0944	Riser Box End Assembly 309 for 14” Box Riser Box End Assembly 309 for 12-5/8” Box Riser Box End Assembly 309 for 15-1/2” Box Flush Lid Riser 309—24 ft. Gray
M9354	Riser Panel 309 Cut to fit Coping Transition Profiles 40” Long Notch on Both Ends
A2414	Flush Lid 309 Hardware Kit
A2896	Lock Assembly for Flush Lid Kit (Includes 2 locks)

© Latham Pool Products, Inc. 2019 All rights reserved.

Flat Lid for TT and UT Systems

A2432 A2433 A2431	Lid Kit Flat 309 for TT 14” Box 24’ Long (includes lid brackets) Lid Kit Flat 309 for UT 14” Box 24’ Long (no brackets) Lid Kit Flat 309 for UT or TT 14” Box 4’ Extension Kit
X0939	Flat Lid 309 Hinge 24 ft
X0940	Flat Lid 309 Lid Panel Attachment 24 ft
A3426	Flat Lid Endcap SET
A3425	Flat Lid 309 Wedge - for Snap Panels SET
A2427 A2428 A2429	Flat Lid 309 End Support Assembly LEFT for 14” Box Flat Lid 309 End Support Assembly RIGHT for 14” Box Flat Lid 309 End Support Assembly for 14” Box SET
M9363	Flat Lid 309 Cut Cover for 14” Box
M9362	Splice for Flat Hinged Lid 309
X0053	Metal Box C-Cap

© Latham Pool Products, Inc. 2019 All rights reserved.

Walk-on Tray Lid Aluminum

A0189	Lid Tray Walk-on Mesh 14” x 23-3/4” (side w/ lip) 1 week
A0229	Lid Tray Walk-on Mesh 24” x 23-3/4” (side w/ lip) 1 week
A0230	Lid Tray Walk-on Mesh 24” x 17-3/4” (side w/ lip) 1 week
A0052	Lid Tray Walk-on Custom Size Specify Dimensions 1 week

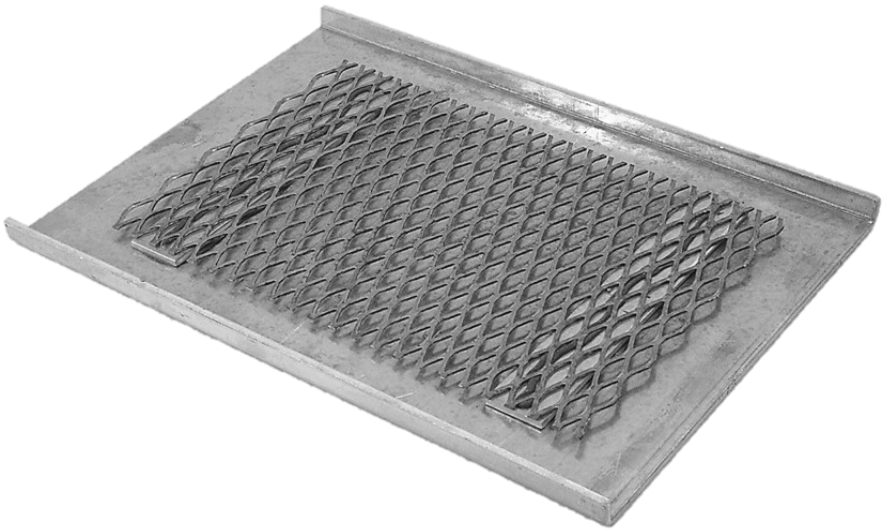

© Latham Pool Products, Inc. 2019 All rights reserved.

Box Perimeter & Lid Forming

A1125	Box perimeter forming encapsulation and brackets kit for VL pool, 14 in. box up to 24 ft. Use w/ box perimeter forming kit
A1368	Box perimeter forming encapsulation and brackets kit for VL pool 14 in. box 4 ft. add-on extension kit
A1968	Box perimeter forming encapsulation and brackets kit for variable lid thicknesses VL pool 14 in. box up to 24 ft. Use when lid thickness requires vertical adjustment
A1419	Box perimeter forming encapsulation and brackets kit for variable lid thicknesses gunite pool 14 in. box up to 24 ft. (Consumables) Use when lid thickness requires vertical adjustment
A1489	Box perimeter forming encapsulation and brackets kit for Gunite pool 14 in. box up to 24 ft. (Consumables) Use with box perimeter forming kit
A1532	Box perimeter forming encapsulation and brackets kit for Gunite pool 14 in. box 4 ft. add-on extension kit
A1150	Box Perimeter Reusable Forming Kit 2-1/2” Used w/ 1 Piece Coping Forms 24’ Box (order lid perimeter encapsulation and brackets separately)
X0695	Box form 2-1/2 in. vertical extrusion 6 ft. length

© Latham Pool Products, Inc. 2019 All rights reserved.

Lid Forming Molds & Kits - Inclined

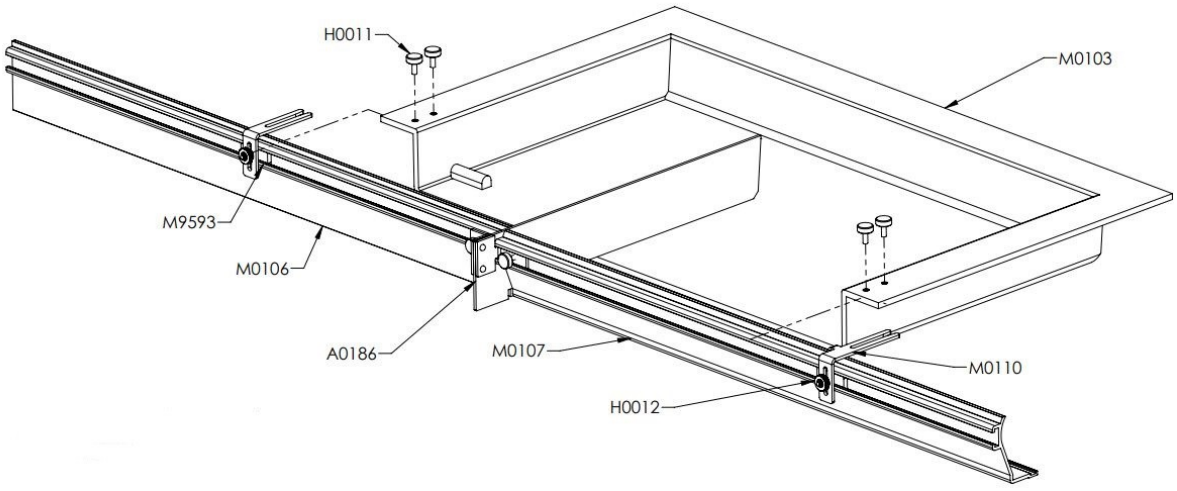

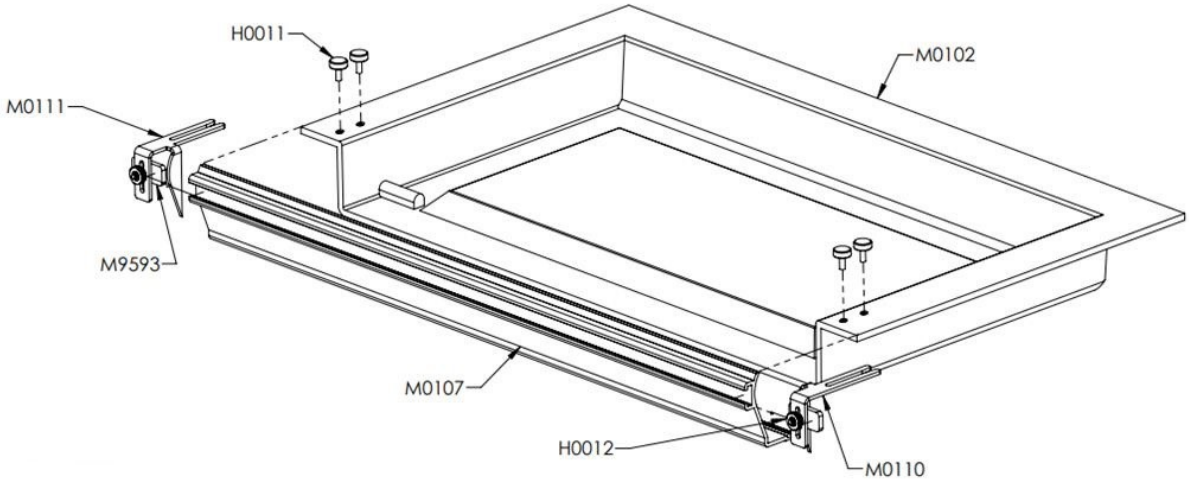

A1021	Inclined Formed Lid Mold
A1028	Lid Forming Inclined Adjustable Divided Mold
M0110	Inclined Lid Forming Retainer Bracket RIGHT
M0111	Inclined Lid Forming Retainer Bracket LEFT
M0107	403 Inclined Deck Form 28” L (X0743)
A2275	Inclined Lid Forming Kit
A1119	Box Perimeter & Lid Forming Inclined 1 Piece

© Latham Pool Products, Inc. 2019 All rights reserved.

Lid Forming Molds & Kits - Cantilever

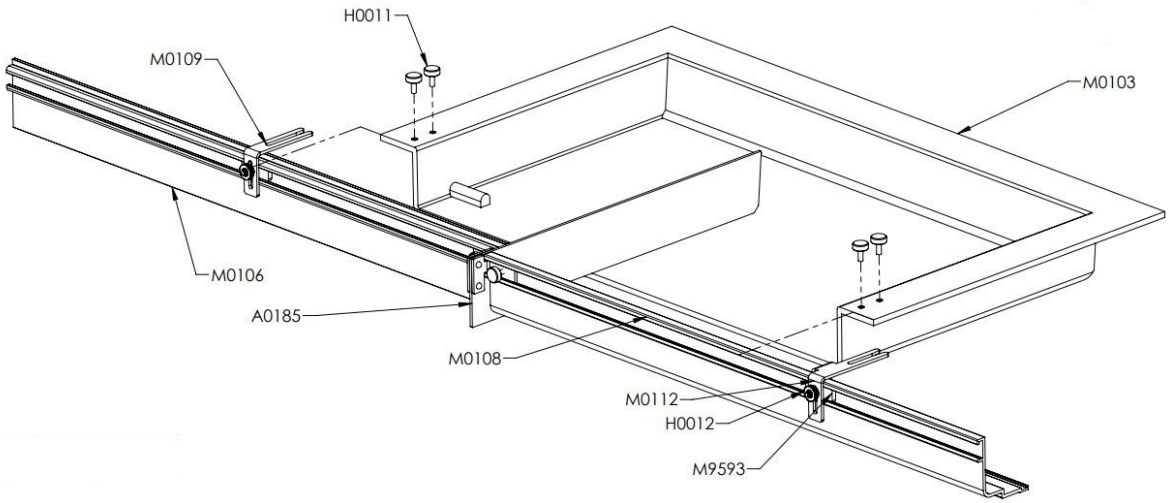

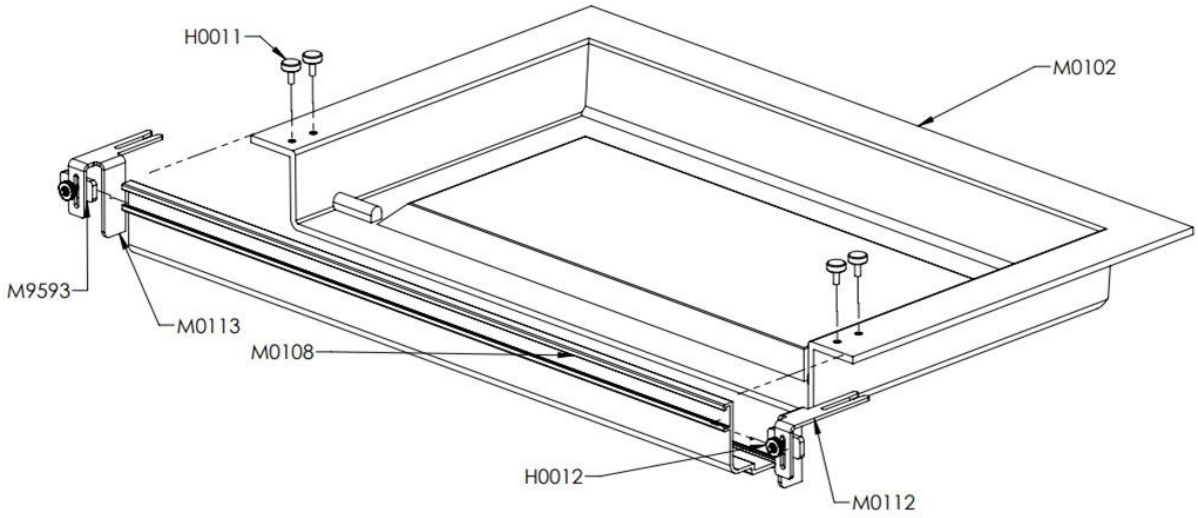

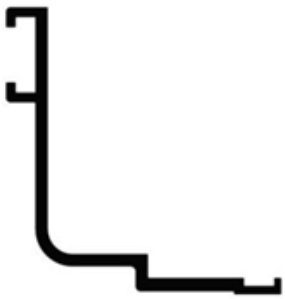

A1024	Cantilever Formed Lid Mold
A1027	Lid Forming Cantilever Adjustable Divided Mold
M0112	Cantilever Lid Forming Retainer Bracket RIGHT
M0113	Cantilever Lid Forming Retainer Bracket LEFT
M0108	403 Cantilever Deck Form 28” L (X0719)
A2276	Cantilever Lid Forming Kit
A1120	Box Perimeter & Lid Forming Cantilever 1 Piece

© Latham Pool Products, Inc. 2019 All rights reserved.

Lid Descenders & Transition Pieces UT

	A1752	Descender Kit NO PROFILE (Metal C-Cap) for Flush Lid Panels up to 20’ TS
	A1110	Descender Kit Rounded for Flush Lid Panels up to 22’ TS
	M0132	Coping Transition - Joins Rounded Shaped Coping Profile to 419 Riser
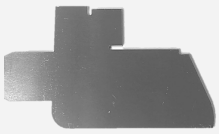	M9388	Coping Transition - Joins Inclined Reusable Coping Form to Riser
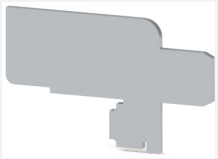	M9389	Coping Transition - Joins Cantilever Reusable Coping Form to Riser

© Latham Pool Products, Inc. 2019 All rights reserved.

Tubes & Leading Edges

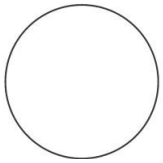

X0676	Tube 4” Aluminum 40 ft.
X0015	Tube 4” Aluminum per ft. (Leading Edge)
X0679	Tube 5” Aluminum .078 Wall 40 ft.
X0003	Tube 5” Aluminum per ft.
X0001	Tube 6” Aluminum STD per ft.
X0016	Tube 8” Aluminum per ft.

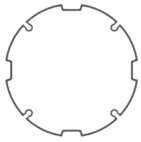

X0672	Tube 6” Extruded Clear Anodized 28 ft.
X0673	Tube 6” Extruded Clear Anodized 20 ft.
X0450	Tube 6” Extruded Splice 72 in.
A0796	Tube Insert for Extruded 6” Tube w/ Screws

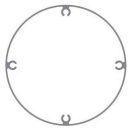

M9538	Composite 6” Extruded Tube Insert, for old Keyed Tube

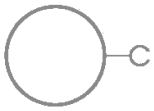

54806-20	Extruded Aluminum Leading Edge 2-1/2” x 19’3”
54806-24	Extruded Aluminum Leading Edge 2-1/2” x 24’

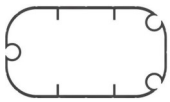

X0007	Leading Edge Tube 2-1/2” Anodized 20 ft.
X0024	Leading Edge Tube 2-1/2” Anodized 24 ft.
M3315	LE Support Raises 2-1/2” LE 1 inch
M3316	LE Support Raises 2-1/2” LE 2 inches

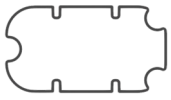

X0451	Rectangle LE Splice 2-1/2” 2018

© Latham Pool Products, Inc. 2019 All rights reserved.

Flush Track Kits and Hardware

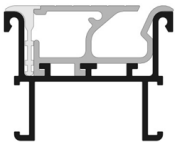	A2123 Recessed Horizontal Track Kit X0849 Track Housing Bottom Piece Gray 22 ft. X0850 Track RHT Top Piece Gray 22 ft. X0847 Spacer Shim Gray 22 ft.
	A2143 Track package RHT 308 (4 guides, pulleys, guide feed, etc.) GRAY A2145 Track Package RHT 308 w/ Protector (4 guides, pulleys, guide feed, etc.) A2200 Parts Kit Track Hardware for RHT 308 (Endcaps, guide feed, etc.) GRAY A2141 Pulley Endcap RHT 308 (recessed horizontal L & R) GRAY A0257 Guide Feed RHT-S (Screw-down) SET X0865 Protector for RHT 308 22’ White
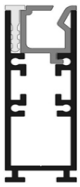	A0021 Slim Flush Track Kit X0585 Slim Flush Vertical Track Housing X0586 Slim Flush Vertical Track X0587 Slim Flush Spacer Shim Gray 22 ft.
	A0009 Slim Flush Track Hardware Kit A0005 Slim Flush Guide - End Pulley Assembly A0006 Slim Flush Guide - Guide Feed with Pulley M9797 Stop TT 403 L Shaped SS M0015 Slim Flush Track Splice
	X0117 Recessed Horizontal Track Screw-down 22 ft. A0826 Track and Housing RHT-S, Screw-down 22 ft.
	A0825 Track Package RHT-S Screw-down (4 guides, pulleys, guide feed, housing) A1794 Top Track Horizontal Flush Deck, Screw-down Hardware Kit A1496 Pulley Endcap Assembly RHT-S Screw-down SET Rev. 305
	A2368 RHT 308 Curved Track, Housing, Splice 3’ Set of 2 GRAY

© Latham Pool Products, Inc. 2019 All rights reserved.

Reusable Coping Forms and Kits

X0743	Coping Form 403 Inclined 6 ft.
A1578	Coping Form 403 Inclined 6 ft. w/ Splice & 3 Spacers
A1735	Coping Form Hardware Kit for Inclined 403
A1252	Coping Form Kit 403 Reusable Inclined 20 x 40
A1254	Coping Form Kit 403 Reusable Inclined 22 x 50

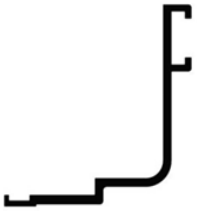

X0719	Coping Form 403 Cantilever 6 ft.
A1577	Coping Form 403 Cantilever 6 ft. w/ Splice & 3 Spacers
A1736	Coping Form Hardware Kit for Cantilever
A1145	Coping Form Kit 403 Reusable Cantilever 20 x 40
A1253	Coping Form Kit 403 Reusable Cantilever 22 x 50

© Latham Pool Products, Inc. 2019 All rights reserved.

Vinyl Liner Encapsulation & Corner Kits

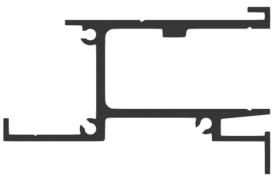

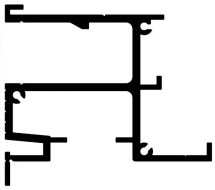

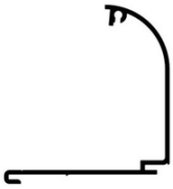

X1650	Encapsulation Vinyl Liner 21’ Piece 418
A5030	Encapsulation Kit 12 x 24 Vinyl Liner 418
A5031	Encapsulation Kit 16 x 32 Vinyl Liner 418
A5032	Encapsulation Kit 18 x 36 Vinyl Liner 418
A5033	Encapsulation Kit 20 x 40 Vinyl Liner 418
A5034	Encapsulation Kit 22 x 50 Vinyl Liner 418
X0420	Vinyl Liner Raised Encapsulation
VLR4001	Vinyl Liner Encapsulation Kit 12 x 24
VLR4002	Vinyl Liner Encapsulation Kit 16 x 32
VLR4003	Vinyl Liner Encapsulation Kit 20 x 40
VLR4004	Vinyl Liner Encapsulation Kit 22 x 50
X0904	Coping Clip-on 805 Rounded Edge 21’ Piece
A1244	Coping Clip-on Kit Rounded Edge 16 x 32
A1247	Coping Clip-on Kit Rounded Edge 18 x 36
A0703	Coping Clip-on Kit Rounded Edge 20 x 40
A1250	Coping Clip-on Kit Rounded Edge 22 x 50
A4102	Corner Kit 2’ Radius for VL 4 Corners
A4100	Corner Kit 6” Radius for VL 4 Corners
A3949	Corner 2’ Radius for VL ME LEFT
A3948	Corner 2’ Radius for VL ME RIGHT
A3947	Corner 2’ Radius for VL NME
A3946	Corner 2’ Radius for VL NME LEFT w/ Support Brace
A3942	Corner 6” Radius for VL ME LEFT
A3941	Corner 6” Radius for VL ME RIGHT
A3940	Corner 6“ Radius for VL NME

© Latham Pool Products, Inc. 2019 All rights reserved.

Gunite & Fiberglass Encapsulation Kits

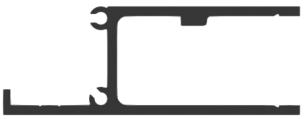

X1651	Encapsulation Gunite 21’ 418
A5010	Encapsulation Kit 10 x 20 Gunite 418
A5011	Encapsulation Kit 12 x 24 Gunite 418
A5012	Encapsulation Kit 16 x 32 Gunite 418
A5013	Encapsulation Kit 18 x 36 Gunite 418
A5014	Encapsulation Kit 20 x 40 Gunite 418
A5015	Encapsulation Kit 22 x 50 Gunite 418

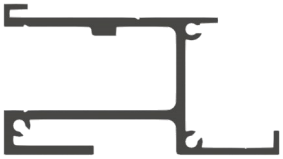

X1953	Encapsulation Fiberglass 21’ 418
A5020	Encapsulation Kit 12 x 24 Fiberglass 418
A5021	Encapsulation Kit 16 x 32 Fiberglass 418
A5022	Encapsulation Kit 16 x 40 Fiberglass 418
A3523	Fiberglass 90 Degree NME Corner 418

© Latham Pool Products, Inc. 2019 All rights reserved.

Hardware for Encapsulation Kits

	X0091	Spacer for Encapsulation for VL & Fiberglass
	X0092	Spacer for Encapsulation - Gunite
	X0125	Encapsulation Filler Metal 10’ for 801 and 403
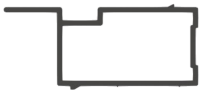	X0175	Encapsulation Filler Metal 2018
	A0407 A1729	Bracket Encapsulation UT Track Retainer SET Encapsulation Hardware Kit (60 Pk anchors, 30 Pk screws)
	A1750 M9883	Coping Joint Clip 805 Rounded 12 Pk Coping Joint Clip 805 Rounded Each

© Latham Pool Products, Inc. 2019 All rights reserved.

ManualTrak™ Drive Assembly

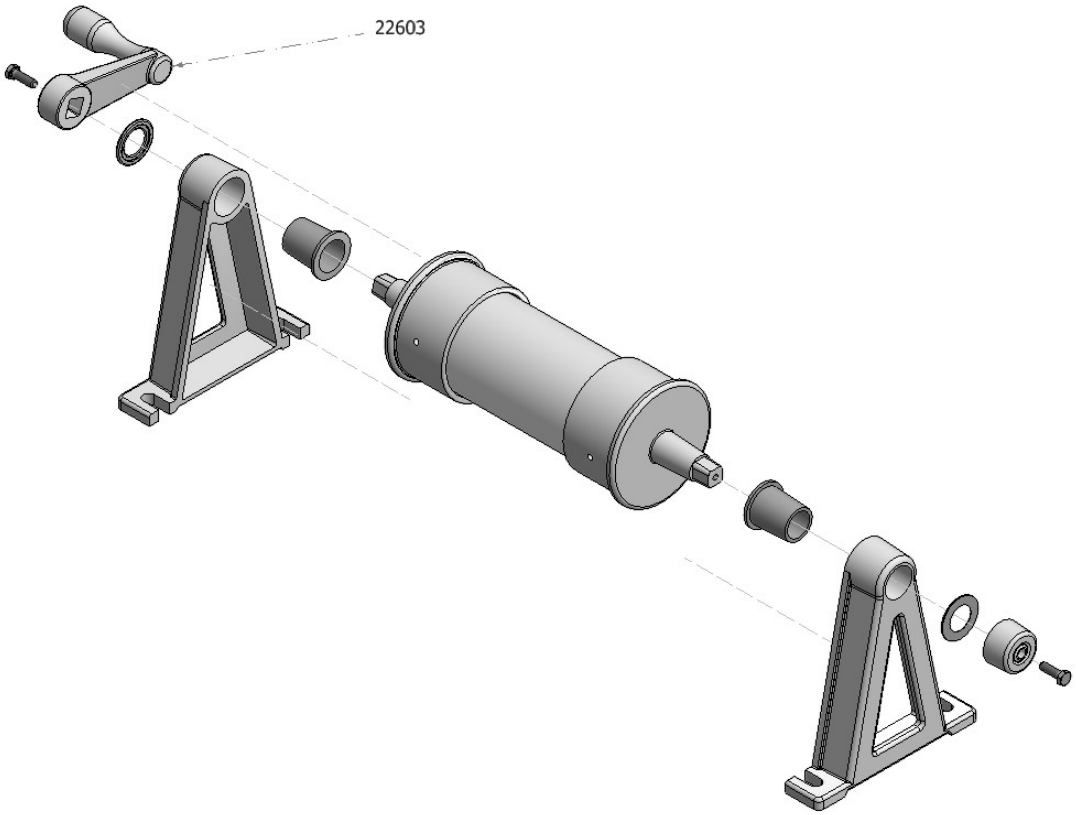

MANUALTRAK	ManualTrak™ Full System. Includes Tracks, Tubes and Installation Kits
H1003	Rocky Roller Mechanism
22603	Rocky Roller Replacement Handle

© Latham Pool Products, Inc. 2019 All rights reserved.

Discontinued Parts

Limited quantities on discontinued parts will be available for service and warranty replacement.

	11301	PowerTrak Baldor Right Angle Reducer
	PT2250	PowerTrak Pulley Assembly
	PT2008	PowerTrak Cover Roller Guide Assembly
	PT2005	PowerTrak Pulley Casting & Guide Kit
	22629	PowerTrak Tube Hub
	22752	Double Dog, Right Infinity—7/8 Bore
	54812	Lid Hinge 7” x 13’ Extrusion
	55063	Under Track, Drill-up 22 ft. Drilled

© Latham Pool Products, Inc. 2019 All rights reserved.

Discontinued Parts

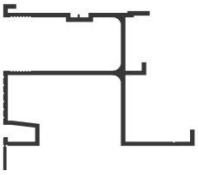	52001 Vinyl Liner Track Retainer 21’ Piece VLR4020 Vinyl Liner Retainer Side-all Kit (Up to 20’ Track Length) VLR4030 Vinyl Liner Retainer Side-Wall Kit (Up to 30’ Track Length) VLR4040 Vinyl Liner Retainer Side-Wall Kit (Up to 40’ Track Length) VLR6050 Vinyl Liner Retainer Side-Wall Kit (Up to 50’ Track Length) VLR6020 Vinyl Liner Retainer End-Wall Kit (Up to 20’ Track Space) VLR6030 Vinyl Liner Retainer End-Wall Kit (Up to 30’ Track Space)
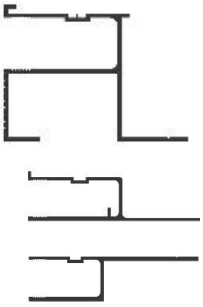	55044 Gunite Track Retainer 21 ft. 55050 Gunite Non-Cantilever Track Retainer 21 ft. 55049 Deck on Deck Raised Track Retainer 21 ft. DDO4100 Raised Deck on Deck Track Retainer Kit GRO4000 Gunite Track Retainer Kit GRO4000E Gunite Track Retainer Extension Kit GRO4100 Gunite Cantilever Track Retainer Kit GRO4100E Gunite Cantilever Track Retainer Extension Kit
	K22626 Track Shim Kit 1/16 x 1-1/2 x 12” (20 Black)
	K22673 Track Shim Kit (20 Short Gray) K22674 Track Shim Kit (20 Gray) UT22674 Track Shim Kit (11 Gray)
	22423 Lid Bracket, Standard Under Track
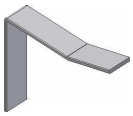	22442 Lid Bracket, Recessed Top Track
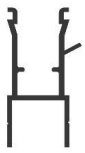	54816 Vertical Flush Top Track Retainer 21 ft. 54814 Vertical Flush Top Track 22 ft.
	HR4000 Horizontal Flush Retainer & Track Kit 55053 Horizontal Flush Top Track 21 ft. 55005 Horizontal Flush Track Retainer 22 ft. 55054 Horizontal Snap-in Cap R-3 10 ft.

© Latham Pool Products, Inc. 2019 All rights reserved.